Metrics for Governance and Management of Information Technology Projects

Nuno Ricardo da Silva Mourão
nuno.r.mourao@tecnico.ulisboa.pt
Técnico Lisboa – October 2014

Abstract **-** The Top Management of Information Technology organizations intend to have an overview of their ongoing and closed projects in order to understand how they affect the company in the present and in the future. However, the existing solutions provide knowledge over constraints like time, cost and quality, resulting in a lack of crucial information related with the stakeholders' satisfaction, resources, risk and scope.
To surpass this known problem, we propose to develop a set of metrics, based on COBIT 5 framework and ISO 21500 standard, that will help companies to govern better and improve their decision making under project management scope. Our set contains the metrics we assume being important for the portfolio of IT Projects. We used the Design Science Research Methodology (DSRM) to conduct our research.
The proposed method was demonstrated in the Information Systems department of a Portuguese Technology company through it Information Systems department. The result was evaluated through interviews, Moody and Shanks Quality Framework and the four principles of Österle et al. enabling assess the solution validity.

Keywords - Information technology, projects, governance, management, metrics.

1. INTRODUCTION

Globally, organizations evolve daily through their projects. Project results can imply changes at various organization levels and areas, financial to human resources, passing through resources or processes. With such variety becomes crucial to evaluate projects to ensure they implement the expected results. Increasingly, the correct implementation of information technology and its government in organizations helps to merge business with IT [1] and get the desired results.
This requirement implies the use of metrics and indicators that will facilitate the organizations' governance, enabling the transformation of raw data, i.e. unprocessed, from projects, in measurable and tangible information. Metrics and indicators allow the verification of real project results and provide relevant information for future actions [2] .
Being a source of a large amount of data, the projects must be measured so the information and knowledge are easily extracted. This measurement helps in decision making and knowledge creation, to avoid future errors and to ensure continuous improvements in the organization. The knowledge extracted during and at the end of projects enables a better assessment of the mistakes that are being made along the entire portfolio and allows the organization to plan upgrades for the following projects.

1.1 PROBLEM

With the importance that metrics have in business evaluation it was expected to be a relevant part in all organizations' projects. However, success in IT projects is assessed and measured taking into account only the errors in cost, time and quality [2]. Project success is defined with a too narrow focus on costs and time within a certain work scope [3]. What these authors claim raise issues concerning other types of properties, the approach of the triangle (cost, time, quality) does not reveal all the gains that projects bring to organizations. Where stand dimensions like evolution of the team, customer satisfaction, stakeholders' expectations and lessons learned for future projects?

The question that arises is: **how can we change this type of evaluation metrics and indicators that are insufficient to realize the full value a project brings?** A project may involve changes in the organization, so the metrics are necessary for organization governance, taking into account projects underway and already ended projects.
Therefore there is the need to extend this triangle to something else, involving more than the three properties/dimensions and including the organization perspective. As it was referred by Kerzner [2] due to the complexity of interactions between elements of work, a simple set of metrics cannot provide a clear picture of project status. The combination of multiple metrics it's required in order to enable informed decision making.

Figure 1. Problem representation

Increasingly, global organizations strive for excellence in their actions and any organization intends to evolve daily to achieve the desired results. The existence of information technology is

now growing in day-to-day business world. An IT department is becoming less a cost center, and more a center of value creation within organizations. Authors state that **the current results of success in IT projects are insufficient** [3] and **the actual rate of successful projects is too low** [4] evidencing the need of a substantial increase in the number of projects completed successfully.
With our thesis we set out to develop a solution that allows organizations to perform a better control of their projects, leaning over other dimensions and properties than the three most common (cost, time and quality), leading consequently to a better perception of project value.

Our proposal is the extension of the actual set of metrics commonly used by organizations, i.e., related to cost, time and quality, for a more comprehensive set, including most valued information to help organizations to manage and govern better. This approach includes not only the assessment of the current situation of an organization as well as forecast analysis regarding projects, and consequently, organizations.
Our thesis has as ultimate goal the creation of a set of metrics that can overcome the abovementioned problems, helping organizations, from top management to project managers and their teams to do a better job in assessing their projects, resulting in positive organization level influences.

We can summarize our proposal in this sentence:

- **Set of metrics to IT Project Management based on good practices from COBIT 5 and ISO 21500 that allows evaluating the value creation through projects, enabling data extraction to decision making, and consequently the improvement of governance and project management.**

2. Related Work

In this section we will approach concepts related with our thesis that contribute to solve the identified problem. Topics like projects, project management and governance are highlights on our thesis.

2.1 Projects

We considered three different definitions, in the first a project is defined as a temporary endeavor undertaken to create a unique product or service [5]; the second where a project is a temporary organization to which resources are assigned who will perform work to deliver a beneficial change [6]; and the third definition, which we decided to consider throughout our thesis, where a project consists of a single set of processes and coordinated and controlled activities with start date and end, undertaken to achieve the project objectives [7]. Despite the different definitions we find that all mention the fact that a project is temporary and serves to create something to achieve a goal. The ISO 21500 definition will be the one we consider on our thesis.

Therefore, based on this definition of project we conclude that an IT project is a task with the aim not only to create but also to modify or improve a product or service related to information technology. All projects have their own characteristics. However, despite the different types there are common characteristics that can be considered taking into account the definitions of project:

- Start and end;
- Uniqueness;
- Objectives to achieve a change;
- Requirements for achieving change;
- Restrictions for achieving change (such as time and cost);
- People from different areas, different stakeholders.

These characteristics must be well defined and unambiguous.
Given the importance of organizations' projects tasks like choose, evaluate, select, plan or manage projects are crucial to ensure a sustainable development. All these tasks are inherent to projects and to its scope, resulting in different stakeholders and people who contribute directly and indirectly to Project success.
If we focus especially in large organizations, always with several projects underway, we can affirm that the portfolio management is one of the main and most important tasks to perform, a task which, if not done well, can lead to failed projects with loss of time and money.
Our thesis scope is focused only on information technology (IT) projects.

2.2 Project Management

Project management is the application of knowledge, skills, tools and techniques in project activities in order to meet project stakeholders' needs and expectations [5]. Involves planning, organizing, monitoring and controlling all aspects of a project, as well as manage, leader and motivate all involved parties [3].

2.3 ISO 21500

The importance of project management is expressed in documents such as international standard ISO 21500 published by the International Organization for Standardization. The ISO 21500 is an international standard that provides best practices for project management, such as processes, process groups and subject groups.
ISO 21500 can be used to guide organizations in their daily tasks, in this case, the project management through processes and concepts, and may have an impact on project performance.
The standard can be used by any public or private organization, for any project, with no restrictions to complexity, size or duration [7]. Its main objectives are:

- Assist project sponsors and senior managers to understand the principles and practices of project management and to help them give appropriate support and guidance to their project managers, project management teams and project teams.
- Allow comparison with other standards and best practices, so that project managers and their teams may have a larger base of support in their projects.

The two referred goals make it clear the importance of stakeholders in projects. Stakeholders should be described in detail in each project. Its responsibilities and functions should be highlighted and communicated based on organization and project objectives.

ISO 21500 will be, in conjunction with [8], [3] and COBIT 5, our main references throughout this work.
It is important to address the areas that have a key contribution to IT projects. Areas such as quality control, risk management, leadership, communication and availability of resources are core areas of project management. Without proper management of these processes a project may fail or suffer several delays.
ISO 21500 and PMBOK divide project management processes into five groups: Initiating, Planning, Controlling, Implementing and Closing. The ISO standard defines the processes that must be performed on each group of processes.

The use of all these processes approaches the organizations' success in their projects. As in all engineering and business systems is necessary to evaluate and control the processes, and the most used way is through the use of metrics [3].
In order to fill the need noted by the author, it is necessary to evaluate these project management processes and control their efficiency, it is also necessary to understand which metrics are needed for each project and process group.
However, this task is not trivial, involving various analyses in different contexts, but ending normally in metrics for costs, time and quality.

2.4 METRICS AND INDICATORS

One attempt to solve this problem was made through the use of scorecards. In our study we approached Balanced Scorecard (BSc), this scorecard is a theory proposed in 1996 by Robert Kaplan and David P. Norton. BSc translates the mission and strategy of the organization in a comprehensive set of performance measures that provides a framework for a measurement and strategic system [9].
Although the high value of this system, a problem resists, the systems helps you choose the right measures for a project, this, in fact, helps the organization but requires choosing metrics for each project.
So, the BSc is useful for projects and also to an organization as a whole, but provides no list of metrics, requiring extra work to define these metrics, and can lead to the utilization of inappropriate metrics.
The use of BSc by organizations is proof that the metrics are necessary, as we have noted throughout this document, then we clarify their importance and value under the organizational context.

Considering the IT project measurement of success or failure, performance indicators are needed, usually called KPIs (Key Performance Indicators), these may include different types of data, primarily involving issues of time and cost.
In Gartner's IT glossary a KPI is defined as a measure of high level outputs indicated for a system, simplified to collect and review weekly, monthly or quarterly. KPIs can measure the state of an organization's business and ensure that all stakeholders are governed by the same goals and strategies [10]. Typical examples are the availability of bandwidth, transactions per second or calls per user. KPIs are often combined with other cost measures (examples: cost per transaction or cost per user) to build a core operating system metrics [11]. A further search leads us to specific IT metrics, such as Earned Value.

Another important point are the rules that indicators and metrics should fulfill to be valid, regardless the level of management to which they belong (Kerzner, 2011):

- Be measurable with precision
- Have an objective or need well defined
- Provide useful information
- Focus an objective
- Reflect the true state of the project

2.5 CORPORATE GOVERNANCE, IT GOVERNANCE AND PROJECT GOVERNANCE

In a simple way we can say that corporate governance is broader than IT governance. IT Governance involves decisions related to actions, expectations and definitions related to company IT. On the other hand, corporate governance is a concern of some of the company stakeholders, as shareholders and the executive board.
Among community the definitions vary, the Organization for Economic Co-operation and Development (OECD) defines corporate governance as a set of relationships between the organization's management, its top management, its shareholders and other stakeholders. The corporate governance provides the structure through which the company objectives are set, the means to achieve those objectives and how to monitor the obtained results [12].

IT Governance concept is relatively new and is a growing concept, resulting in a lack of consensus and understanding of the term [13]. International Organization for Standardization refers that IT Governance involves evaluating and directing the use of IT to support the organization and monitor its use to achieve goals [14]. In COBIT 5 the definition says that governance ensures that stakeholders' needs, conditions and options are evaluated to determine balanced goals in order to being achievable; defines the orientation by prioritizing and decision making; and monitor the performance and compliance with agreed objectives and directions [15].

Project governance includes the decisions about managing a project. In project governance is defined the responsible for every decision on the project, therefore, encompasses decision tasks and how these decisions should be made.
Thus, the project governance is the bridge between corporate governance and project management [16].
On ISO 21500 is mentioned that project governance can include topics like [7]:

- Define the management structure;
- Policies, processes and methodologies to be used;
- The limit of authority for decision making;

- Responsibilities of stakeholders;
- Interactions like reporting and the scale of problem and risks.

2.6 COBIT 5

To make a coherent reasoned analysis of metrics and goals of IT we had to base on some existing framework.
We decided to use COBIT 5 as it is the latest version of ISACA framework, launched in April 2002, and which resulted from the upgrade of the previous version, 4.1. COBIT 5 incorporates many concepts and theories relating to IT and management in general [17], being one of the best and most comprehensive good practices guides for IT management and governance; with this choice we avoid the aggregation of metrics from different sources that would result in an less coherent analysis.
ISACA states that his framework aims to help organizations achieve their goals related to IT governance and management [15].
COBIT 5 contains a detailed analysis of organizations' objectives at two levels: global and IT. It also includes a list of 37 high-level processes with respective metrics, categorized into four domains of IT and a domain of governance. Furthermore, it includes a list for each process of its inputs and outputs.

Among the many drivers that led to COBIT 5 creation we highlight some [15]:

- Manage the increasing dependence of the organizations' success on external businesses, IT and stakeholders;
- Deal with the amount of information and knowledge and know how to filter that information in order to improve business decision making;
- Manage the information taking into account well defined models;
- Guide organizations in areas such as innovation and emerging technologies;
- Assist in achieving value creation through the use of IT.

Thus, we concluded that COBIT 5 features would be very useful for our study, which led to its choice as base for our metrics.

3. PROPOSAL

Our proposal consists of an analysis of COBIT 5 metrics and Enterprise Goals (EG), evaluating its adaptability to IT projects context, this adaptability is reasoned by ISO 21500 processes.

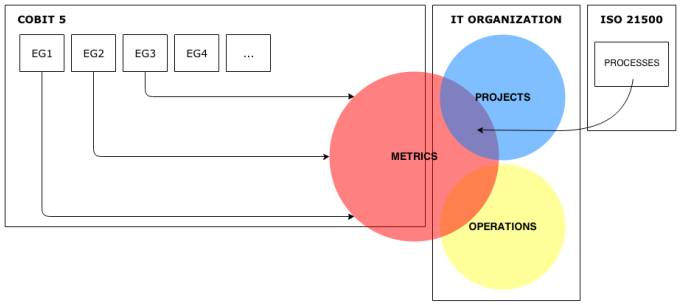

Figure 2. COBIT 5 Enterprise Goals, IT Organization and ISO 21500

As can be seen in figure 2, every COBIT 5 Enterprise Goal have metrics associated, represented in the red area. About IT organizations we considered that in the blue area are represented their projects and the yellow area corresponds to operations like products, services, maintenance and other tasks without pre-defined completion criteria and mainly characterized by repetitive processes.
The Enterprise Goal metrics can be appropriate for IT projects and for operations, corresponding to intersections represented among the colored areas.
With this figure we intend to illustrate that although our analysis falls on all the Enterprise Goals metrics, our study will focus only on the corresponding intersection between projects and metrics, being the ones considered valid for our final solution. This intersection is justified based on the analysis to project management processes from ISO 21500.
To carry out this analysis we followed a cycle with several steps, where each iteration begins by analyzing the metrics of each Enterprise Goal. In figure 3 is represented the cycle.

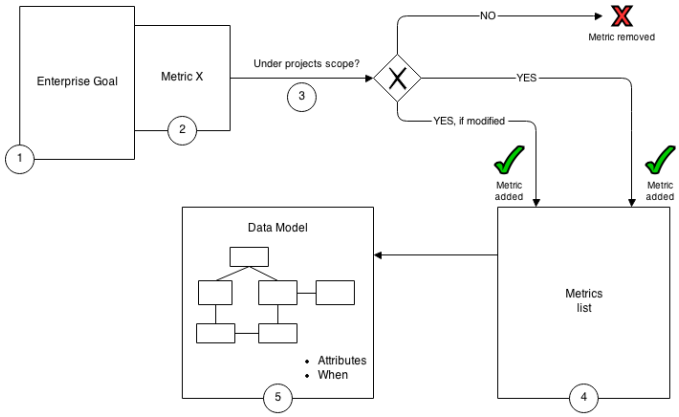

Figure 3. Cycle of analysis

The cycle steps are:

1. ***Enterprise Goal*** – from COBIT 5. It's represented by the direct transcription from framework table.
2. **Metric X** – this step corresponds always to the choice of the metric, if the Enterprise Goal contains three metrics then this step will have M1 (metric 1), followed by M2 and M3. These metrics are listed in the same table as the Enterprise Goal.
3. **Metric validation** – corresponds to checking if the metric is relevant or not in the IT Project

management context, in order to be accepted or rejected. Validation is effected as follows:

a) Acceptance, if the description of the metric, evaluated in the projects context can:
   i. Be accepted without any change;
   ii. Be accepted if we replace the word **investments** for **projects;**
   iii. Be accepted if we replace the expression **products and services** for **projects;**
   iv. Be accepted if we replace the word **initiative** for **project;**
   v. Be accepted if we replace the word(s) **programme(s)** for **project(s);**
   vi. Be accepted if we add the word **projects** to the metric description

   If after these conditions the metric does not make sense under projects context it'll be rejected. Otherwise, it acceptance will be validated and justified through ISO 21500 processes and other contents of project management.

4. **Metrics list** – in this listing are present only the metrics that have been accepted under IT projects context, already with the necessary modifications to their acceptance.
5. **Data model** – this last step corresponds to the creation of entities and attributes needed for the instantiation of IT project metrics, i.e., after metric acceptance a second analysis is performed in this step. After all iterations of the cycle this results in a complete data model. Throughout each Enterprise Goal these attributes and entities appear in tables with the following format:
   a) **Attribute or Entity Name**
   b) **When –** referring to which ISO 21500 process group (Initiating, Planning, Implementing, Controlling and Closing) or Post-Project the attribute/entity belongs.

Is, thus, concluded our cycle analysis, which will have as many iterations as Enterprise Goals to analyze.
The development of a data model enables validation for any IT department regarding its projects portfolio. This approach has as ultimate goal to create a reasoned list of metrics that organizations can use to improve their IT projects results.
The data model is a suggestion that can always be adjusted depending on the organization.

3.1 COBIT 5 ENTERPRISE GOALS AND METRICS

As we've mentioned, we analyzed COBIT 5 addressing the metrics related to Enterprise Goals. These Enterprise Goals were developed using the existing dimensions in Balanced Scorecard and represent a list of goals that organizations typically defined for themselves. Although not an exhaustive list, most organizations specific goals can be easily mapped to one or more of these generic Enterprise Goals [18].
COBIT 5 also has a similar list for IT-related objectives and a list of well-defined processes, some of them transversal to organization, which could be the target of a similar analysis.

As an example we represent below one of the analysis to one Enterprise Goal.

3.1.1 ENTERPRISE GOAL – STAKEHOLDER VALUE OF BUSINESS INVESTMENTS

Table 1. Enterprise Goal 1

Enterprise Goal 1	Metric
Stakeholder value of business investments	Percent of investments where value delivered meets stakeholders expectations
	Percent of products and services where expected benefits are realized
	Percent of investments where claimed benefits are met or exceeded

Stakeholders differ from project to project, so they should be initially described with the greatest detail possible, as well as their roles and responsibilities, taking into account the organization and project objectives [7].
Regarding Enterprise Goal 1, as it refers the value of business investments, we consider that in this case, the stakeholder is the project sponsor/owner.
As owner and sponsor may lead to different interpretations, we present two definitions: one where sponsor is the person who initiates, finances, has an in interest in monitoring level, or defends the project [3] and another where sponsor is the owner of the project and that is a representative of the business, and, ultimately, is responsible for success or failure in the delivery of benefits from project to the organization [8].
Therefore, for the purposes of our thesis we'll consider the definition of Cadle & Yeates saying the owner is the same person as the sponsor.
The definition of investment we'll consider says that is the act of putting money, effort or time on something that will lead to a profit, advantage or return of money, effort or time used [19]. Therefore, we can say that a project is always an investment, because it will always be necessary time, money or effort to run it.

Analyzing the three metrics on table 1:

- M1 – Percent of projects where value delivered meets stakeholders expectations
  We replaced investment by projects; taking into account the statement made above that a project is an investment. The value delivered, referred on metric, has to be defined on the project initial phase in order to enable their evaluation in the closing phase, as well as the stakeholders' expectations. Metric is accepted.
- M2 – Percent of projects where expected benefits are realized

The second metric is related to products and services, which we also replaced by projects. Metric accepted.

- M3 – Percent of projects where claimed benefits are met or exceeded
  Replacing investments by projects, the third metric covers the claimed benefits by investments, i.e., by projects. These benefits must be defined early in the project and its whole set corresponds, in the end, to the delivered value.
  As such, after the substitutions on metrics 2 and 3, they become similar and in the projects context we can consider that metric three covers metric two.

Expectations and benefits can be measured in three different moments: in intermediate deliveries, at the end of the project, or after its completion, in some time defined by the business.
Expectations are what stakeholders, from a single team member to a whole department, expect that project can bring as improvement. An example of expectation is the experience added for future projects.
Benefits are what sponsor waits from project; the value that project will add is the set of expected benefits, such as advantage over competitors or cost reduction in certain tasks.
We've created new metrics based on the three above. The new metrics are related only with projects and have the following descriptions:
X1: Percent of projects where value delivered meets stakeholder's expectations
X2: Percent of projects where expected benefits by sponsor are met or exceeded

Through these metrics we opted to create in the data model two entities, Benefit and Expectation, enabling the instantiation of all the benefits and expectations for the project. These entities have their own attributes.

Table 2. Attributes/Entities for metrics of Enterprise Goal 1

Metric	Attribute/Entity	When
X1	Benefit	Implementing – manage stakeholders Closing – close project
X2	Expectation	

According to project management there is a process to manage stakeholders and their benefits and expectations, having direct relation with these metrics. At project closure a benefits and expectations evaluation should be done.

With the example above we showed how our analysis was made for each Enterprise Goal, always following the steps of our cycle.

3.2 DATA MODEL

As completion of the proposal step, we developed a data model that encompasses all the attributes and entities resulting from the COBIT 5 Enterprise Goals analysis.
This model encompasses the major entities of an IT project and the necessary attributes to evaluate the metrics.

The realization of a data model makes the process flexible, as it allows any organization to add or remove entities and attributes depending on their needs.

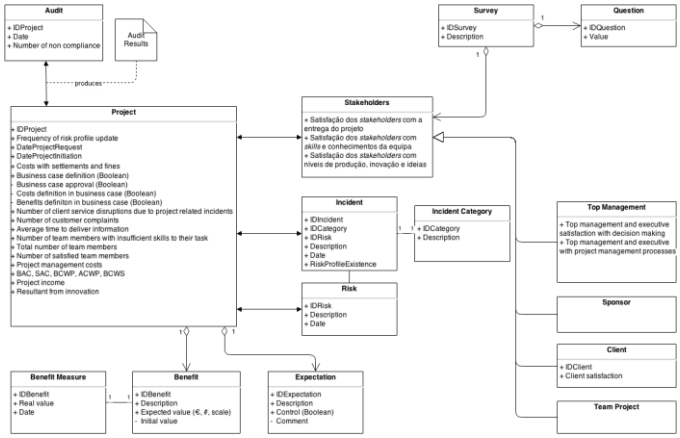

Figure 4. Data Model

Some considerations about our data model:

- Includes four inheritances of the entity stakeholders to exemplify the possible instantiation of different stakeholders.
- The satisfaction attributes on stakeholders may be represented by a value within a range
- All project attributes are measurable
- Surveys are aggregations of questions
- Each incident only belongs to a category
- Each benefit has only one measure of benefit, which enables the finding if it was reached or not
- We assigned identifiers (IDs) to enable the listing of entities

Besides the data model, we grouped metrics by ISO 21500 process groups and we made a mapping between metrics and processes. This enabled to see how the metrics are evaluated through the project life cycle.

4. DEMONSTRATION

In our study we assess the applicability of our proposal in the IS/IT Department from a reputed technologic organization, Portugal Telecom, through an interlocutor, third line director, which deals in its day-to-day tasks with management of project teams.
However, due to the validation of our model take too much time to perform, by the improvement or not of the project management results, our demonstration consists of a simulation of how to apply our data model.
At Portugal Telecom we assessed the major difficulties that would be experienced if the model application goes ahead.

In our demonstration for each process group of ISO 21500 we listed the correspondent metrics and described how they should be instantiated and how managers should proceed to apply our metrics.

5. EVALUATION

The validation process was carried out through interviews with IT project management professionals. We also used the Moody and Shanks Quality Framework and the Principles of Österle et al. as formal validation models.

5.1 INTERVIEWS

The use of interviews with IT professionals has as objective the validation of our research, final proposal and demonstration.

With this technique it's possible to capture the interviewee opinion about the developed artifact and the utility of it.

Our interview was conducted with four professionals in the IT project management area. Their profiles are suitable due to their project scopes, they operate inside a reputed organization and have years of experience managing projects. They have the following roles and profiles:

- Project manager with about 100 people to manage – IT/IS area and business process support
- Project manager with about 50 people to manage – Mobile digital assets area
- Project manager with about 100 people to manage – Sales force automation area
- Project manager with teams between 4 and 8 people – Lead tracking area

We have performed five questions in order to formally evaluate our model. The questionnaire included also the classification of each metric in the list, as to their existence and usefulness.

This questionnaire helped us greatly in our model validation; through its results we developed our conclusions, present in the next sections.

5.2 MOODY AND SHANKS QUALITY FRAMEWORK

Through interviews conducted in Portugal Telecom it was possible for us to assess which quality criteria of Moody and Shanks framework were achieved by our model. All findings come from the feedback collected in interviews together with the assessment (scale from 1-5, where 5 strongly agree, 4 partially agree, 3 indifferent, 2 partially disagree, 1 strongly disagree) given to the framework criteria.

- **Completeness:** average 4.25. The metrics division was based in the international standard ISO 21500 process groups and in the metrics from COBIT 5 framework; thus, the model is complete because it's based on two models also complete. Interviewees also mentioned that the approach of dividing by groups of processes is benefic but can lead to different opinions;
- **Correction:** average 4.25. The method achieved a good grade for the correction because according to the interviewees the proposed metrics have, in general, a high degree of importance and are useful in project management. The fact that they are reasoned by ISO processes makes the model correct;
- **Comprehensibility:** average 4.25. Due to the use of bases such as ISO 21500 and COBIT 5 all interviewees understood easily the method and its purpose;
- **Implementability:** average 3.75. The interviewees considered that the method would be more easily implementable in large scale projects because they usually already have a set of metrics. For organizations that are not based on evaluation metrics it would be difficult to implement.
- **Flexibility:** average 3.25. This criterion was the one that had a lower value. This value is due to the fact that the professionals did not have more metrics to include in the method/list, improving its flexibility. However, this value isn't negative because there was in consideration the data model.
- **Integration:** average 4. The method is easy to implement in IT organizations' projects, in this case, Portugal Telecom. The integration of the final artifact is consistent with what is considered important in the area.
- **Integrity:** average 3.75. The integrity of the artifact is high because of its consistency with the associated project management processes. This was mentioned by interviewees as important since it reasons the proposal.
- **Simplicity:** average 3.75. Initially the method was difficult do understand due to the existence of metrics that the interviewees considered "confuse" and due to the possible inclusion in different process groups. With a more detailed explanation the method was understood, leaning to a positive evaluation. Formally, the method is considered simple because the data model to apply the method contains the basic entities of an IT project.

Concluding, the criteria obtained all the results above 3, so we can consider them positive. To highlight: the positive completeness, correction and comprehensibility. The most negative criterion was the flexibility.

5.3 ÖSTERLE ET AL. PRINCIPLES

With the application of the four principles proposed by Österle et al. [20] we obtained:

- **Abstraction**: the artifact can be applied to any organization and its processes for managing projects whatever the methodology used by the organization. This is because the use of a data model eases the method and facilitates the addition of new attributes and entities that are needed. The set of metrics is valid for any type of IT projects as it was possible to determine through interviewees who usually manage different types of projects.
- **Originality**: the developed artifact used a comparison between COBIT 5 and ISO 21500 resulting in a possible resolution to a known problem. Nothing similar has been found in related work despite several types of solutions to overcome the problem.
- **Justification**: the artifact is supported by the motivation, problem relevance and related work. A

description and justification of the artifact itself was reasoned through a globally known framework and an international standard resulting in a well defined cycle.

- **Benefit**: according to our validation interviewees, the artifact could bring added value to an organization who seeks improvements in project management evaluation through reasoned metrics.

In conclusion, the four Österle et al. principles to evaluate formally an artifact were attained, showing the validity the model production.

6. Conclusion

The performed bibliographic analysis allowed us to conclude that there are several attempts to solve the problem initially identified, that organizations only focus on the evaluation of their projects taking into account cost, time and quality factors.

Due to the existence of this problem, efforts to tackle it have been developed, however, unsuccessful. The Chaos Manifesto notes that the problem remains and IT projects continue to have low success rates.

We followed Design Science Research Methodology (DSRM) as the methodology to develop our study. The first step of DSRM suggests the problem identification and the motivation to solve it, leading us to study issues related to management and governance under IT context. This study and related work allowed the definition of the model to be used in our proposal.

Our proposal is defined as a set of metrics for govern and manage IT projects. Based on processes and process groups of ISO 21500 and COBIT 5 metrics, our proposal was supported through good practices of these two models (international standard and framework) and resulted in a set of metrics and corresponding data model for its instantiation.

Our study was validated and assessed through interviews with IT professionals, the criteria present in Moody and Shanks Quality Framework and the Österle et al. principles.

6.1 Main contributions

The results of our study show that the application of a solution based on metrics and processes accepted by the community could enhance project management in IT organizations and improve it at all organizations' levels.

It was proved that the focus of these managers lies in the triangle metrics (cost, time and quality), but not equally. Metrics related to cost and quality got much better ranking than those related to time, this means that the most important for these managers is to not exceed the budget and to deliver a quality product, regardless of the time spent.

Despite the positive results, it should be noted that the professionals with whom we contact were reluctant about the ease of implementing the model in organizations where doesn't exist a regular measurement of metrics. This process involves a lot of discipline and rigor, and this was the main focus of concern of the interviewed managers. It has been suggested that the implementation of this process should be made through pilot projects, with less metrics to evaluate, in order to conclude whether the method can be applied.

Regarding the developed set of metrics and respective data model, we achieved goals like: metrics are reasoned by project management, avoiding agglomeration of metrics without any rational set; the flexibility of data model, which enables the addition of new attributes; and the inclusion of entities considered core on project management.

Survey results show that organizations are concerned with project management evaluation through metrics at different points in the projects life cycle, nevertheless, the metrics are more focused on the base triangle (cost, time, quality).

Overall, the objectives were achieved because we found a likely problem to solve, identified and defined appropriate process to solve the problem, and evaluated the proposal within an IT organization.

6.2 Limitations

Our model limitations are largely related to the impossibility to perform our demonstration the way we want. As we follow the DSRM methodology, it's necessary to make the demonstration step of our model, where we should apply the metrics to a portfolio and proceed to a maturation time to collect the results; however, due to time problems it wasn't possible. With this outcome, our demonstration went through a set of best practices to apply in order to be able to instantiate the entities and attributes of the data model, and subsequently properly evaluate the related metrics. The lack of a concrete instantiation of the model was our major limitation.

We also want to refer limitations on the final output that could be more graphical and visual; this limitation is referred in the future work section.

6.3 Communication

The last step of the methodology we followed, the DSRM, is to communicate our work.

This step was accomplished through the interviews with IT project managers that we referred in section 5.1. These interviews were an added value because the participants made suggestions and critics about the model, enabling our conclusions, limitations and suggestions for future work.

The conclusion of this dissertation also contributes to the communication step as it provides to academic community a new basis for study and to propose new solutions.

6.4 Future work

In this section we present possible improvements and future work related with our study.

Following the rationale of the performed analysis to COBIT 5 Enterprise Goals metrics, this study can be complemented with the metrics present in IT-related goals and the COBIT 5 specific processes. This development could enrich the final set of metrics and bring added value to the theoretical content.

Moreover, the development of a dashboard powered by a database based on the developed data model would enable a graphical view of the metrics gathered and evaluated. In this dashboard the functionalities could be varied: import data from Excel spreadsheets, create reports taking into account the different groups of metrics, charts with the evolution of the

metrics through the project lifecycle. This improvement does not add theoretical value, but would be a practical complement to the conducted study.

REFERENCES

[1] S. De Haes and W. Van Grembergen, "IT Governance and Its Mechanisms," *Information Systems Control Journal*, vol. 1, 2004.

[2] H. Kerzner, Project Management Metrics, KPIs, and Dashboards: A Guide to Measuring and Monitoring Project Performance, John Wiley & Sons, Inc., 2011.

[3] D. Brandon, Project Management for Modern Information Systems, IRM Press, 2006.

[4] K. C. Laudon and J. P. Laudon, "Managing Projects," in *Management Information Systems*, Pearson, 2012, p. 529.

[5] Project Management Institute, A Guide to the Project Management Body of Knowledge, 3rd ed., Project Management Institute, Inc., 2004.

[6] J. R. Turner, The Handbook of Project-based Management: Leading Strategic Change in Organizations, 3rd ed., McGraw-Hill, 2008.

[7] International Organization for Standardization, ISO 21500:2012, Guidance on project management, International Organization for Standardization, 2012.

[8] J. Cadle and D. Yeates, Project Management for Information Systems, 5th ed., Pearson, 2008.

[9] R. S. Kaplan and D. Norton, The balanced scorecard. Harvard Business Press., Harvard Business Press, 1996.

[10] K. Bauer, "The Power of Metrics: KPIs - The Metrics That Drive Performance Management," *DM Review*, vol. 14, no. 9, 2004.

[11] Gartner, "IT-Glossary," 2013. [Online]. Available: www.gartner.com/it-glossary/kpi-key-performance-indicator/. [Accessed 13 February 2014].

[12] Organisation for Economic Co-operation and Development, "OECD principles of corporate governance," 2004.

[13] A. H. G. R. Kan, "IT Governance and Corporate Governance at ING," *Information Systems Control Journal*, vol. 2, 2004.

[14] International Organization for Standardization, "ISO/IEC 38500:2008, Corporate governance of information technology," 2008.

[15] ISACA, COBIT 5 - A Business Framework for the Governance and Management of Enterprise IT, 2012.

[16] E. Alvarez and J. R. Turner, "Project Governance: Reviewing the Past, Envisioning the Future…," *Project Management Institute*, 2012.

[17] S. De Haes and W. Van Grembergen, "Enterprise Governance of IT and the Evolutions in COBIT: An Academic Perspective," *Business Information Systems Workshops*, pp. 88-103, 2012.

[18] ISACA, COBIT 5 - Enabling Processes, 2012.

[19] U. Cambridge, Cambridge Dictionary, Cambridge University Press, 2013.

[20] H. Österle, J. Becker, U. Frank, H. T., K. D., ... and E. Sinz, "Memorandum on Design-Oriented Information Systems Research," *European Journal on Information Systems*, pp. 7-10, 2011.