# Using Event Logs and the PSI-theory to Analyse Business Processes

Pedro Luís Linares Pinto
pedro.pinto@tecnico.ulisboa.pt
Técnico Lisboa

November 2014

## ABSTRACT

The development of information technologies (IT) has increased the number of IT dependent business processes within organisations, enforcing the crucial role of IT in today's enterprise implementations. In spite of IT advances, human beings still constitute the most valuable asset of any enterprise and the cooperation between them is indispensable for the operation of business processes. Traditional business process modelling techniques have limitations regarding the acquisition process which is time-consuming and do not take fully advantage of IT to represent updated process models. Besides, these techniques are limited concerning the analysis and improvement of the resulting models. This paper proposes a method to analyse updated business processes in terms of the collaboration between the participant actor roles, taking into account the importance of IT and human beings at those processes. The method receives as input event logs extracted from the application and technological infrastructure that supports the business processes and combines techniques from both Process Mining and the Ψ-theory to analyse enterprise ontology models against the mined processes, detecting opportunities for business process reengineering. The method was applied to analyse a VPN access approval process within a national defence governmental institution. The evaluation was performed using the Österle principles.

## 1. INTRODUCTION

Real life systems are abstracted through the use of models [11]. These abstractions provide an increased ability to process information more quickly, facilitate the communication of knowledge to others, and enhance the ability to reason about the system modelled by omitting certain aspects according to specific purposes and points of views [9].

Concerning business processes modelling, there are several techniques as the traditional flow charts, Petri Nets [21], Event Driven Process Chains (EPC) [20], and BPMN [14]. However, an appropriate understanding of the notion of business process for the purpose of (re)designing and (re)engineering business processing is missing in the referred techniques [1].

The resulting business process models that specify the flow of activities and information do not provide the means to assess the actual consistency and completeness of a business process [6]. Business process reengineering approaches are often based on best practices and informal methods [4, 10, 12, 19], lacking a formal theoretical foundation.

The lack of formal semantics behind business process languages, the ambiguous and unclear descriptions contribute to the difficulty in assessing the resulting process models [3]. Activities and informational objects whose meaning is communicated only by natural language usage constitute an example of such ambiguity. Business process modelling methods tend to focus on aligning business and technological concepts at a high level of detail but do not prescribe the principles to design complete business processes [3].

Current business process modelling techniques are also limited in terms of the model acquisition process. The acquisition process is mostly manual, usually supported by interviews, surveys, text/document analysis, among others [13]. This type of acquisition is time-consuming and requires effort, making it hard to reflect organisational changes as soon as they take place [13].

In this research the Design Science Research Methodology (DSRM) is used, which implies following the six activities portrayed in the DSRM process model, namely: problem identification and motivation, definition of the objectives for a solution, design and development of the proposed artefact (i.e. a method in this case), demonstration, evaluation and communication [17].

The problem addressed in this paper relies on the lack of methods to analyse updated business processes in terms of the collaboration between actor roles involved at those processes. This problem is aligned with the observation that within a single organisation the departmental segmentations without an interdepartmental communication can have detrimental effects on business processes [24]. Business value is generated when isolated efforts are transformed into cross-functional activities [2].

This paper proposes a method that facilitates the analysis of updated business processes in terms of the collaboration between the actor roles involved on those processes, through the combination of process mining techniques and the Ψ-theory, which is a theory in enterprise engineering [8].

The method is aligned with the three generic goals of enterprise engineering [8], once that it takes into account human beings as the most valuable asset of any enterprise, enforces the benefit of an integrated approach within enterprise operation that considers the enterprise domains as a whole (i.e. processes, software, etc.) and relies on the Ψ-theory which describes the operation of enterprises, supporting business understanding and enterprise changes in a way that makes those organised complexities manageable.

This method has as input event logs which register how organisational business processes are conducted in the field. Process mining techniques are applied in order to extract business processes models from the application logs [22].

After discovering the actual enterprise business processes, the theoretical foundations of Design & Engineering Methodology for Organisations (DEMO) [7] are applied to infer ontological models that describe the structure of those processes in terms of business transactions. A formal checking over the consistency and completeness of the business processes is then performed in order to ensure that all the transactional steps are explicitly registered in the business process model.

Providing a method to analyse the actual operation of business processes and helping to identify requirements in the underlying applications that support those processes are the main objectives of this paper.

The proposed method was applied to a real life event log from a national defence governmental institution. The considered log portrays the execution of the VPN access approval process for 53 cases.

In section 2 the theoretical foundations in which the proposed method is based upon are presented, namely DEMO and the Ψ-theory axioms. The method is explained in section 3. Section 4 demonstrates the use of the method in the analysis of a real life business process. In section 5 an evaluation over the proposed artefact is performed in order to measure how well it supports a solution to the problem and section 6 concludes this paper.

# 2. DEMO

Design & Engineering Methodology for Organisations (DEMO) is a methodology for modelling, (re)designing and (re)engineering organisations and networks of organisations [7].

DEMO applies the theoretical foundations of the Ψ-theory, which is the theory that underlines the notion of enterprise ontology [7]. The Ψ-theory has four axioms namely the Operation Axiom, the Transaction Axiom, the Composition Axiom and the Distinction Axiom and one theorem, the Organisation Theorem.

## 2.1 Ψ-theory Axioms

The Ψ-theory comprises four core axioms that specify how individuals establish commitments and communicate. The next sections present the operation, transaction, composition and distinction axioms

### *2.1.1 Operation Axiom*

The first axiom of the Ψ-theory states that the operation of an enterprise is constituted by the activities of actor roles, which are elementary chunks of authority and responsibility, fulfilled by subjects [7]. In doing so, these subjects perform two kinds of acts: production acts and coordination acts. These acts have definite results: production facts and coordination facts, respectively [7].

By performing production acts (P-acts for short) the subjects contribute to bringing about the goods and/or services that are delivered to the environment of the enterprise [7]. By performing coordination acts (C-acts for short) subjects enter into and comply with commitments towards each other regarding the performance of production acts [7]. A subject in its fulfilment of an actor role is called an actor.

Using the notions of actor roles, C-acts/facts, and P-acts/facts, a full abstraction is made from theirs particular implementations. In this way, the particular subjects that fulfil the actor roles at a particular time, the particular way in which C-acts are performed, and the particularly way in which P-acts are performed are all abstracted [7].

### *2.1.2 Transaction Axiom*

The Transaction Axiom makes clear how the coordination acts and the production acts mentioned in the Operation Axiom relate with each other. The Transaction Axiom states that coordination acts are performed as steps in universal patterns [7]. These patterns, also called transactions, always involve two actor roles and are aimed at achieving a particular result [7].

A transaction evolves in three phases: the order phase (O-phase for short), the execution phase (E-phase for short), and the result phase (R-phase for short) [7]. One of the two partaking actor roles is called the initiator, and the other is called the executor of the transaction.

In the order phase, the initiator and the executor work to reach an agreement about the intended result of the transaction, i.e., the production fact that the executor is going to create as well as the intended time of creation [7].

In the execution phase, this production fact is actually brought about by the executor. In the result phase, the initiator and the executor work to reach an agreement about the production fact that is actually produced, as well as the actual time of creation (both of which may differ from what was originally requested) [7]. An illustration of the Basic Transaction Pattern is provided in Figure 1.

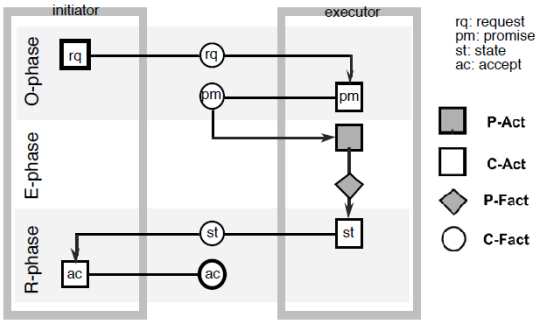


**Figure 1 - Basic Transaction Pattern [7]**

### *2.1.3 Composition Axiom*

The Composition Axiom of the Ψ-theory states that every transaction is enclosed in some other transaction [7]. This axiom provides the basis of a well-founded definition of the notion of business process, stating that a business process is a collection of causally related transaction types, such that the starting step is either a request performed by an actor role in the environment (external activation) or a request by an internal actor role to itself (self-activation) [7]. Every transaction type is represented by the complete transaction pattern [7].

### *2.1.4 Distinction Axiom*

The Distinction Axiom of the Ψ-theory states that there are three distinct human abilities playing a role in the operation of actors, called *performa*, *informa* and *forma*. These abilities regard

communication, creating things, reasoning, and information processing [7].

The ability that deals with the form aspects of communication and information is called *forma* like uttering and perceiving of sentences in some language, the syntactical analysis of such sentences, coding schemes, transmission of data, storage and retrieval of data or documents [7].

The *informa* ability abstracts the form aspects and is concerned with the content aspects of communication and information as sharing of thoughts between people, the remembering and recalling of knowledge and reasoning [7].

The *performa* ability concerns the bringing about of new, original things, directly or indirectly by communication as commitments, decisions and judgments [7].

## 3. PROPOSAL

In this paper a method is proposed to analyse the consistency and completeness of updated business processes in terms of the collaboration between the actor roles involved on those processes. The proposed method receives as input application logs, where events created by employees within the completion of their daily tasks remain registered, and returns, as output, the missing elements of the business processes supported by those applications, according to the DEMO transaction patterns.

The method is based on Process Mining and DEMO, once that it starts by discovering updated business processes from the application event logs, analysing them against the corresponding DEMO models that portray the conversation steps between the actor roles participating on those processes.

The method comprises two main phases: the bottom-up and the top-down phases described through the bottom-up steps (BU for short) and top-down steps (TD for short). An illustration is provided in Figure 2.

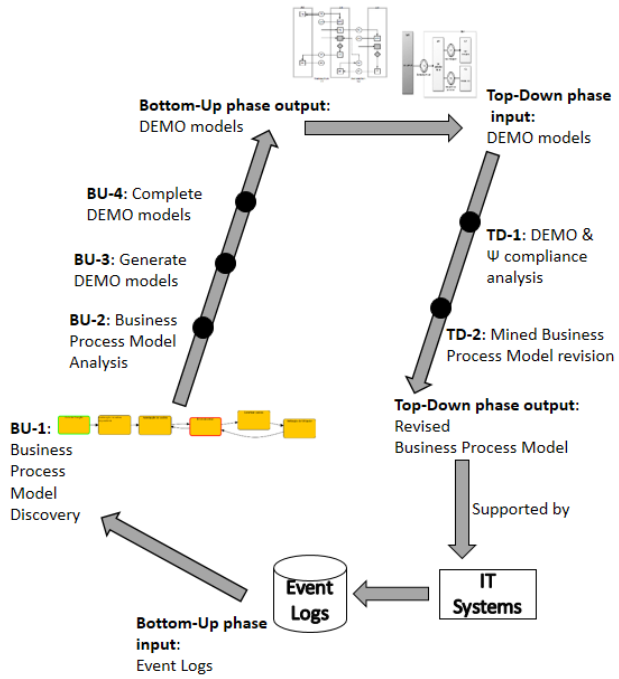


**Figure 2 - Proposed method**

The bottom-up phase starts with the discovery of a business process model from an event log through the use of process mining techniques, and proceeds with the inference of the corresponding DEMO process model.

The bottom-up phase aims at identifying the production and coordination acts of the produced DEMO model. These abstracted production and coordination acts are modelled in DEMO and confronted with the Ψ-theory axioms to assess their consistency and completeness.

The bottom-up phase is therefore the first step to capture the coordination and production acts of a process model. However, the DEMO process model corresponding to the mined business process model may have conversational gaps between the actors roles involved on the business process. In this cases, the DEMO models are completed according to the Ψ-theory axioms so that they can be used later to check if the initial mined process model complies with the DEMO transaction patterns.

The top-down phase is where a gap analysis is performed and where missing actions are identified in the discovered business process model using the corrected DEMO model that complies with the Ψ-theory axioms. This DEMO model is used to review the mined business process model, so that its embedded coordination and production actions comply with the corrected DEMO model.

### 3.1 The Bottom-up Phase

The bottom-up phase starts with event logs extracted from the application that supports the business process to be analysed and returns the corresponding DEMO models.

#### *3.1.1 Step BU-1: Discover the business process model from the event log*

In this phase a business process model is discovered from the application event logs. There are several process mining

algorithms that can be applied for that purpose, as well as available tools that implement a selection of those algorithms.

In this paper the Flexible Heuristics Miner (FHM) algorithm is used. An important motivation for the use of that algorithm was his good performance over practical situations and the easier understanding of its resulting models when compared with other formalisms [25].

### *3.1.2 Step BU-2: Analyse the discovered process model*

This step aims at analyse the design artefacts used to represent the discovered business process model from the last step. It analyses the portrayed activities and classifies them according to the Ψ-theory's operation and distinction axioms. As a result each activity is classified as a production or coordination act (operation axiom) and also as a *performa*, *informa*, or *forma* speech act (distinction axiom).

Beyond that, the operation axiom also discriminates the actor roles involved in the process. The result of this step is a traceable list that maps the coordination and production acts and actor roles to the discovered process model from where they were sourced.

### *3.1.3 Step BU-3: Generate the DEMO models*

This step starts by focusing on the *performa* coordination and production acts identified in the last step. Those acts represent the ontological actions that are further classified according to the transaction axiom.

In other words, each business process activity is classified as a *request*, *promise*, *state* or *accept* coordination act according to the basic transaction pattern. In case the process is analysed according to the standard transaction pattern, the *decline*, *reject*, *stop* and *quit* acts are also considered [7].

### *3.1.4 Step BU-4: Revise the DEMO models*

Missing acts from DEMO models generated in the previous step are added into a revised DEMO model. These missing acts are the ontological acts that are not described explicitly in the mined business process model.

The DEMO models are revised according to the transaction axiom so that every transaction goes through the steps defined in the O-phase, E-phase, and R-phase [7].

Composition axiom is then applied and ensures that all of the transaction steps follow a logical sequence according to the pattern. This is the last step on the bottom-up phase and creates a set of revised DEMO diagrams, namely a process structure diagram (process model) and an actor transaction diagram (construction model).

## 3.2 Top-Down Phase

In this phase, the DEMO models produced as output of the bottom-up phase are used as a means to check the compliance of the original mined process models. The results of this validation are then used to revise the mined business process model so that it becomes complete and consistent with the DEMO models. This phase is described through the explanation of the top-down steps.

### *3.2.1 Step TD-1: Assess the compliance*

This step performs a gap analysis that identifies the ontological acts in the revised DEMO model that are not defined in the mined business process model.

### *3.2.2 Step TD-2: Revise the discovered process model*

The original mined process model is revised so that its activities match the missing ontological acts. The revised process becomes Ψ-theory compliant, meaning it is now consistent with the transactional model and complete as it explicitly contains all transactional steps.

The list of missing business process ontological acts are explicitly registered in the business process model, which may lead to changes in the applications that support that model. These application changes may origin new event logs that can be used as input in further iterations of the method, within a continuous business process analysis perspective.

# 4. DEMONSTRATION

The demonstration was performed in a national defence governmental institution. The institution administrates shared IT infrastructures, including databases, operating systems, internal networks, and supports users through a centralized IT service desk.

Logs from the IT service desk application were analysed and the proposed method was applied over 53 VPN access approval process instances. Each event registered in the log was identified by the corresponding process instance identifier, its category (i.e. VPN access), the time of its creation, the person responsible for triggering it, as well as its current status (i.e. closed).

The VPN access approvals process starts with a VPN access request, followed by a notification by the IT service desk to the requester. The process proceed with the authorization granting by the VPN access approvers and terminates with the access creation followed by the corresponding end-user validation.

The application of the proposed method is presented step-by-step for the VPN access approval process. As referred previously, the proposed method has a first bottom-up phase that starts with event logs gathered from the process supporting applications, goes through the business process discovery and from that infers the corresponding DEMO models that are used as input of the top-down phase to analyse business processes and their underlying applications in terms of the missing conversation steps between the actors involved in the process.

## 4.1 Application of the Bottom-up Phase

The bottom-up phase started with an event log extracted from the IT service desk application, whose process instances were filtered by the VPN access approval process as a way to illustrate the application of the proposed method. The associated business process for granting VPN access to the internal network maintained by the institution in scope was then discovered and the corresponding DEMO construction and process models were inferred. This phase is explained through the description of the bottom-up steps.

### *4.1.1 Step BU-1: Discover the business process model from the event log*

The objective of this step is to discover the business process model from the provided event log. For that purpose, the process

mining toolkit ProM 6 [23] was used and a graphical representation for the VPN access approval was obtained, as illustrated in Figure 3. Note that for complex event logs, specific techniques may be considered in order to improve the mining results [5].

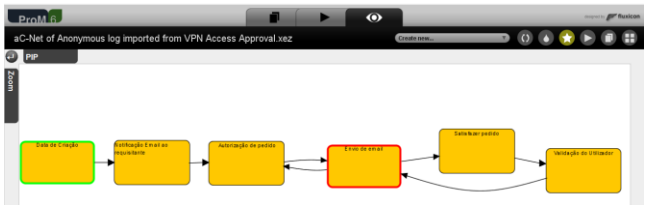


**Figure 3 - Output of the "Mine for a Casual Net using Heuristics Miner" plugin in ProM 6**

The business process representation portrayed in Figure 3, resulted in the application of the "Mine for a Casual Net using Heuristics Miner" plugin available in ProM 6. This plugin was built upon the Flexible Heuristics Miner (FHM) algorithm. The rationale behind the use that algorithm was his good performance over practical situations and the easier understanding of its resulting models when compared with other formalisms [25].

As Figure 3 shows, the process starts with the creation of a ticket ("Data de Criação" activity) in the IT service desk application based on an implicitly VPN access request, which is followed by the corresponding notification to the requester ("Notificação Email ao requisitante" activity).

The request is then approved by the employees with responsibilities in the organisation to do so ("Autorização do pedido" activity). An authorization is always mandatory for granting VPN access to the internal network owing to the fact that this kind of access is risky because it allows access to the company internal resources from outside the office.

After the authorization is approved, the initial VPN access request is satisfied and a validation is performed by the end user ("Validação do utilizador" activity).

### *4.1.2 Step BU-2: Analyse the discovered process model*

After discovering the business process model from the event log, the next step of the method states that activities presented in the model should be analysed according to the operation and distinction axioms of the Ψ-theory. For that purpose Table 1 is introduced, adding the analysis according to the transaction axiom.

**Table 1 - Events classified according to the operation, distinction and transaction axioms from Ψ-theory**

| Event Description | Operation Axiom | Distinction Axiom | Transaction Axiom |
|---|---|---|---|
| Creation date | Coordination | Ontological | T01/request |
| Email notification to the requester | Coordination | Ontological | T01/promise |
| Request authorisation | Production | Ontological | T02/execute |
| Send email | - | Datalogical | - |
| Execute request | Production | Ontological | T01/execute |
| User validation | Coordination | Ontological | T01/accept |

All events presented in Table 1 were classified as ontological except the datalogical send email act which was excluded and did not feed the generation of the DEMO models from the next method's step.

Afterwards, the ontological acts were classified attending to the Ψ-theory's operation axiom as coordination and production acts.

Finally, the coordination acts were classified according to the transaction axiom. Labelling two different events as production acts confirmed the existence of two different ontological transactions (T01 and T02), as well as the coordination acts associated to each one of them.

This Ψ-theory analysis, provided input for the next step of the proposed method, being essential in the generation of the DEMO models.

### *4.1.3 Step BU-3: Generate the DEMO Models*

After classifying the originally activities represented in the mined business process model according to the Ψ-theory distinction, operational and transactional axioms, it was possible to generate the corresponding DEMO construction model, represented through the Actor Transaction Diagram in Figure 4.

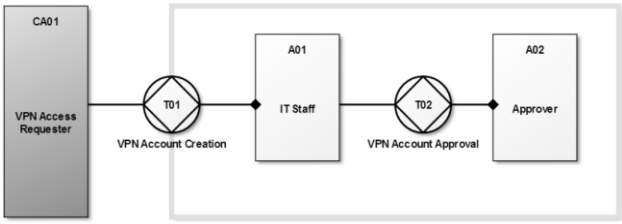


**Figure 4 - Actor Transaction Diagram for the VPN access approval process**

As it is portrayed in Figure 4, the VPN access approval process is built upon two casually related transactions types (T01 and T02) according to the business process definition stated in the Ψ-theory's composition axiom.

In transaction T01 the employee fulfilling the VPN Access Requester role interacts with the employee belonging to the IT Staff role in order to get a VPN account created.

Besides the IT Staff agreement on granting the VPN access, a formal approval from a responsible (typically the business unit manager) is needed, so that the requirements for the VPN access are properly reviewed, and a decision regarding the necessity of this access for an employee or service provider can be made based on their responsibilities within the organisation.

As referred in the Ψ-theory's transaction axiom, every transaction type is represented by the complete transaction pattern. The

DEMO process model is presented in Figure 5, considering the classification based upon the transaction axiom presented in Table 1.

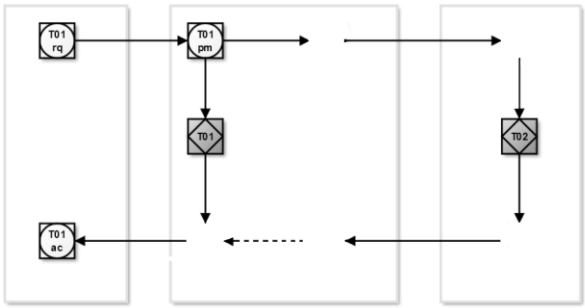


**Figure 5 - Incomplete VPN access approval process representation in DEMO**

As it is possible to verify, some steps are missing from the DEMO process model, indicating that those elements are not explicitly represented in the mined business process model discovered from the original application event log.

Regarding transaction T01, there is not an explicit act stating the VPN account creation. All the coordination acts related to the commitments between the IT Staff and the formal business approver are also missing from the original VPN access approval business process model.

### *4.1.4 Step BU-4: Revise the DEMO Models*

In the final step of the bottom-up application of the proposed method, the incomplete DEMO process model was revised in order to include all the transactional steps, according to the basic transaction pattern, as illustrated in Figure 6.

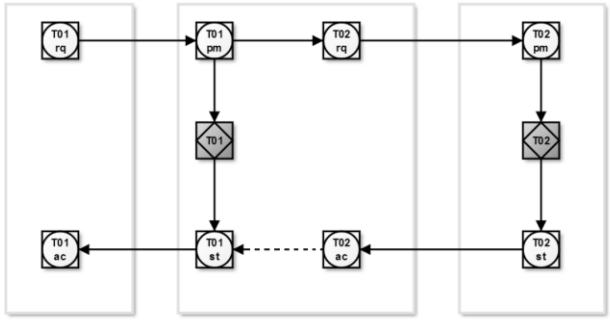


**Figure 6 – Revised VPN access approval process in DEMO**

This step ended the bottom-up phase of the proposed method outputting a revised DEMO process model that was then used against the original VPN access approval process in order to ensure that all the commitments between the involved actors were explicitly defined.

## 4.2 Application of the Top-down Phase

After producing the DEMO construction and process models in the bottom-up phase, the compliance over the original real life VPN access approval process was performed.

### *4.2.1 Step TD-1: Assess the compliance*

In this step the acts represented in the revised DEMO process model that were missing in the discovered VPN access approval process model were identified. Figure 7 emphasizes the 5 missing acts found, namely: the T01 state, as well as the T02 request, promise, state and accept.

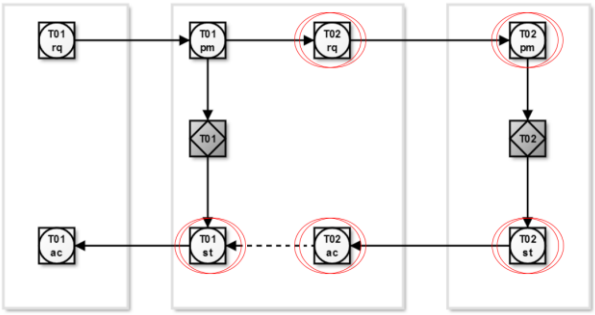


**Figure 7 - Gap analysis: missing steps in the VPN access approval DEMO process**

### *4.2.2 Step TD-2: Revise the discovered process model*

In this step a revision over the VPN access approval process model discovered from the event logs was performed, according to the gaps identified in the previous step. The revised labelled process is depicted in Figure 8.


**Figure 8 – Revised VPN access approval process**

The changes imply adding five new activities to the process, one for each missing ontological act: T01/state, T02/request, T02/promise, T02/state and T02/accept. The revised business process is now consistent and complete according to the Ψ-theory.

Those findings also suggested new IT requirements to the application that is supporting the VPN access approval process in the institution. In fact, the revised process allowed for changes in the supporting application by modifying the configurations of the implemented workflow for VPN access approvals, so that it includes explicitly the identified missing activities.

# 5. EVALUATION

The demonstration described in the previous section confirmed the suitability of the proposed method's application to a real life process by showing that it was possible to analyse the actual VPN access approval process, using the theoretical foundations of DEMO.

The objectives stated in the introduction were achieved once that the proposed method provided a solution concerning the analysis over the actual operation of business processes, and helped to identify new requirements in the application that supported the VPN access approval process.

The four principles of Österle [16] were also applied for the evaluation of the artifact produced in this DSRM research (i.e. the proposed method). These principles are:

- **Abstraction**: the proposed artefact must be applicable to a class of problems.
- **Originality**: the artefact must substantially contribute to the advancement of the body of knowledge;

- **Justification**: the artefact must be justified in a comprehensible manner and must allow validation;
- **Benefit**: the artefact must yield benefit, either immediately or in the future for the respective stakeholder groups.

The application of the four principles mentioned led to the following results:

- **Abstraction**: the proposed method may be applied to analyse a range of business processes, either in the public or private sector, once that the transactional patterns between the actor roles involved in those processes are universal [7].
- **Originality**: by gathering insights from the Process Mining and Enterprise Engineering disciplines and combining the knowledge in the scope of one method, the proposed method facilitates the analysis of actual business processes (not assumed ones) within an engineering perspective.
- **Justification**: process mining and the Ψ-theory justify the steps performed over the proposed method to analyse the operation of the updated business processes.
- **Benefit**: the proposed method benefits organisations by making clear the responsibilities of the different actor roles involved in the execution of business processes. It considers the enterprise domains as a whole (i.e. processes, software, etc.) and relies on the Ψ-theory, supporting business understanding and enterprise changes in a way that makes those organised complexities manageable. In addition, the use of DEMO models simplifies the analysis task and speeds up the results delivery process [15].

# 6. CONCLUSION

This paper proposes a method for analysing the operation of updated business processes in terms of the collaboration between actor roles involved in those processes. This analysis starts in the actual implementation of those processes.

By having as input event logs from the applications that support the processes execution, the proposed method do not start with outdated or assumed process models.

The analysis performed is not merely based on informal practices or heuristics. On the contrary, it is based on the theoretical background that underlies DEMO and its models, namely the Ψ-theory which is one of the theories in enterprise engineering.

On the other hand, and besides facilitating discussions on business process analysis, the proposed method starts with the application logs, favouring in this way deliberations regarding the need for new requirements within the applications that support the business processes targeted by the method.

However, and once that it starts with the application logs, the method may not be applied to analyse processes that are not supported by any application or technological infrastructure (i.e manual processes). Moreover, unclear log descriptions may lead to ambiguities within the application of the steps described in the method and that is why it is important to involve stakeholders in the process.

In order to speed up the business process analysis, automatic tools based on the method proposed in this paper may be considered in future works.

# 7. REFERENCES


[1] Albani, A., and Dietz, J., "Enterprise ontology based development of information systems." *International Journal of Internet and Enterprise Management* 7.1 (2011): 41-63.

[2] Antonucci, Y., and Goeke, R., "Identification of appropriate responsibilities and positions for business process management success: Seeking a valid and reliable framework." *Business process management Journal* 17.1 (2011): 127-146.

[3] Barjis, J., "Automatic business process analysis and simulation based on DEMO." *Enterprise Information Systems* 1.4 (2007): 365-381.

[4] Becker, J., Kugeler, M., and Rosemann, M., eds. *Process Management: a guide for the design of business processes: with 83 figures and 34 tables*. Springer, 2003.

[5] Bose, R., Mans, R., and van der Aalst, W., "Wanna improve process mining results?." *Computational Intelligence and Data Mining (CIDM), 2013 IEEE Symposium on*. IEEE, 2013 : 127-134.

[6] Caetano, A., Assis, A., and Tribolet, J., "Using business transactions to analyse the consistency of business process models." *System Science (HICSS), 2012 45th Hawaii International Conference on*. IEEE, 2012: 4277-4285.

[7] Dietz, J., "Enterprise ontology. Theory and methodology" – *Springer*, 2006.

[8] Dietz, J., et al. "The discipline of enterprise engineering." *International Journal of Organisational Design and Engineering* 3.1 (2013): 86-114.

[9] Hatch, M., Cunliffe, A., (2006) Organization Theory: Modern, Symbolic, and Postmodern Perspectives."

[10] Jansen-Vullers, Monique, H., et al. "Trade-Offs in the Performance of Workflows–Quantifying the Impact of Best Practices." *Business Process Management Workshops*. Springer Berlin Heidelberg, 2008: 108-119.

[11] Liles, D., and Presley, A., "Enterprise modeling within an enterprise engineering framework." *Proceedings of the 28th conference on Winter simulation*. IEEE Computer Society, 1996: 993-999.

[12] Mansar, S., and Reijers, H., "Best practices in business process redesign: use and impact." *Business Process Management Journal* 13.2 (2007): 193-213.

[13] Zacarias, M., Magalhães, R., and Tribolet, J., "Engineering the Organization from the Bottom Up", *The 2nd International Workshop on Human Resource Information Systems*, Jun. 2008.

[14] Model, Business Process. "Notation (BPMN) Version 2.0." *OMG Specification, Object Management Group* (2011).

[15] Op't Land, M., et al. "Towards a fast enterprise ontology based method for post merger integration." *Proceedings of the 2009 ACM symposium on Applied Computing*. ACM, 2009.

[16] Osterle, H., et al. "Memorandum on design-oriented information systems research." *European Journal of Information Systems* 20.1 (2011): 7-10.

[17] Peffers, K., et al. "A design science research methodology for information systems research." *Journal of management information systems* 24.3 (2007): 45-77.

[18] Recker, J., Indulska, M., and Green, P., "How good is BPMN really? Insights from theory and practice." (2006).

[19] Reijers, H., and Mansar, S., "Best practices in business process redesign: an overview and qualitative evaluation of successful redesign heuristics." *Omega* 33.4 (2005): 283-306.

[20] Scheer, A., "ARIS - Business Process Modeling, Second, Completely Revised and Enlarged Edition." (1999).

[21] Van Der Aalst, W., and Van Hee, K., *Workflow management: models, methods, and systems*. MIT press, 2004.

[22] Van Der Aalst, W., et al. "Process mining manifesto." *Business process management workshops*. Springer Berlin Heidelberg, 2012: 169-194.

[23] Verbeek, H., Buijs, J., Van Dongen, B., and Van Der Aalst, W. et al. "Xes, xesame, and prom 6." *Information Systems Evolution*. Springer Berlin Heidelberg, 2011. 60-75.

[24] Vergidis, K., Turner, C., and Tiwari, A., "Business process perspectives: Theoretical developments vs. real-world practice."*International Journal of Production Economics* 114.1 (2008): 91-104.

[25] Weijters, A., and Ribeiro, J., "Flexible heuristics miner (FHM)."*Computational Intelligence and Data Mining (CIDM), 2011 IEEE Symposium on*. IEEE, 2011.