A Low Voltage Grid Monitoring System using Wireless Mesh Networks

João Pedro Taveira Pinto da Silva

Abstract—This work develops a LV grid monitoring solution using a Wireless Mesh Network. A Wireless Mesh Node is developed, which runs the Contiki OS on a Atmega AVR. The network uses 6LoWPAN header compression on an IPv6 network. The sensor implements a standards compliant DLMS/COSEM server with over 50 OBIS objects. The reliability of the solution has been demonstrated in a real-life test-bed in Batalha, Portugal and a success ratio of over 99% was obtained.

Index Terms—smartgrid; sensorization; wireless mesh networks; DLMS; COSEM; RPL; 6LowPAN

1 Introduction

THIS report contains the project for the final course work of the author. The author was an active part of the e-Balance [1] team at Inesc Inovação (INOV) and was responsible for the software of the iBee sensors and gateways. The e-Balance project [1] allowed to validate the sensors in a real deployment.

Managing and maintaining Low Voltage (LV) grids is becoming increasingly challenging for Distribution System Operators (DSOs) due to the complex layout of the grid and the changing energy demands. With the introduction of Distributed Energy Resources (DER) in the grid, due to low carbon housing regulations, the LV grid has become bidirectional. The use of voltage and current control in the LV grid has become indispensable to the DSO in order to manage the grid.

Up to now the DSO has had a passive approach to maintaining the LV grid due to the lack of suitable equipment to gather the much needed information on the infrastructure's operational status. Currently there is a renewed interest and motivation from the DSOs, in the context of Smart Grids, to deploy network connected sensors along the LV network.

There is no prevalent communication solution to install a data collector at the secondary substation and use a polling system to communicate with remote sensors on the grid powered by the substation. Nowadays, it is not uncommon to find the DSO use Power Line Communications (PLC) to communicate with smart meters located at customers premises, using the feeder cables as the communication medium. However, in the case of a fault in the feeder, e.g., a short circuit, the communication is lost, while if a wireless communication solution was used vital information on the fault location and dimension could be obtained.

This work is divided as follows: System Overview and Requirements; System Implementation and Validation; Demonstrator.

2 System Overview and Requirements

The sensor and gateway developed in this work are the basis for such a wireless communication system in the form of a Wireless Mesh Network. The Wireless Sensor Network (WSN) nodes are typically deployed in distribution cabinets along the streets or in energy poles belonging to the circuits connected to the secondary substations. The WSN nodes receive query requests and report their data back to a

• *João Pedro Taveira Pinto da Silva, nr. 49680,*
E-mail: jtps@tecnico.ulisboa.pt,
Instituto Superior Técnico, Universidade de Lisboa.

Manuscript received October 17, 2017.

Distribution Transformer Controllers (DTC) via the WSN gateway. The latter, is placed next to the collector at the secondary substation and here is connected to it through an Ethernet link.

2.1 Overview

The system provides end-to-end communication between a central monitoring application and remote sensors, providing real-time alerts and grid operational information for LV and public lighting (PL) equipped feeders.

The Figure 1 shows correlation between "e-Balance" architecture and the system.

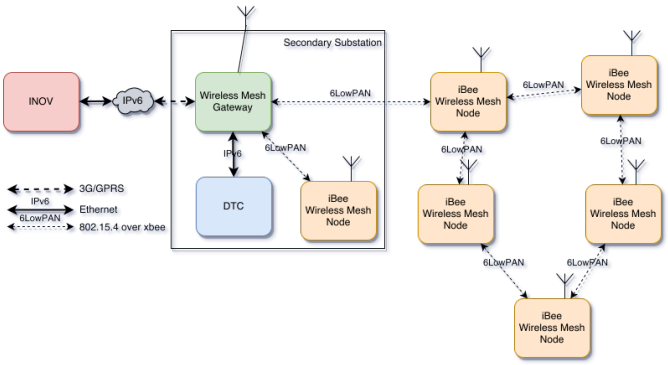

Figure 1. System Overview Block Diagram

DTC is the management unit of the Secondary Substation. This equipment will be connected to the Wireless Mesh Gateway (WMG) through Ethernet. The application layer protocol used for communication between the DTC and the several Wireless Mesh Nodes (WMN) is Device Language Message Specification (DLMS) [2], with the DTC acting as DLMS client and WMN as DLMS servers. WMN represent points to be monitored in the LV or PL feeders. In order to INOV team be able to monitor and analyse the system in operation, the WMG is connected to Internet using USB broadband modem. The Internet Protocol version 6 (IPv6) connectivity is achieved by IPv6 tunnelling, over Internet Protocol version 4 (IPv4) connection.

2.1.1 Network stack

Figure 2 presents the stack of protocols to be used in the wireless mesh network. In the DTC, there is a DLMS client running over User Datagram Protocol (UDP)/IPv6 and physically attached to the WMG through Ethernet. The protocols used in the Radio-frequency (RF) network below the application layer are common Internet-of-Things (IoT) standards, which are used in this type of networks, where power constrains and redundancies are very important requirements. Routing Protocol for Low-Power and Lossy Networks (RPL) [3] provides routing in Low Power and Lossy Networks (LLNs), enabling further stability through route optimisation and self-healing functionalities.

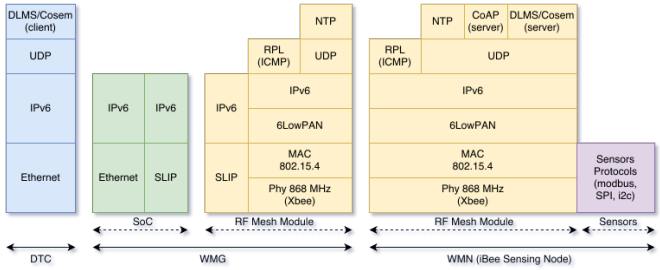

Figure 2. System Wireless Network Stack

2.1.2 Wireless Sensor Node

The WMN is responsible for providing DTC, any LV Grid measurements, whenever such request arrive. The WMN is expected to gather all measurements by polling the several physical sensors at fixed, but configurable, time interval. The WMN must also align the regular readings to each instant zero seconds of each minute, of synchronised time reference from Network Time Protocol (NTP). The Figure 3 highlight the WMN physical sensors.

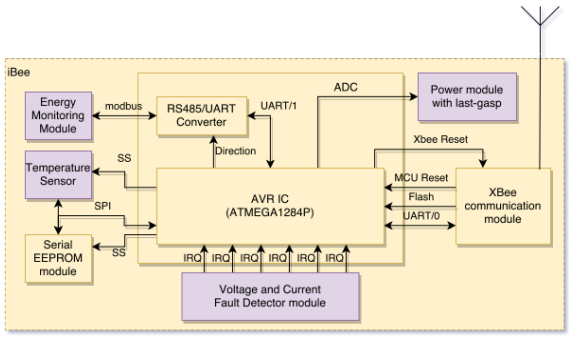

Figure 3. iBee Block Diagram

The WMN is responsible for the detection of deviations of measurements to outbound limits

previously set. This is achieved by chaining the acquisition with basic predicate interface, provided in the sensors common interface. The sensorization mechanisms of WMN merge the several nature of physical sensors, providing readings validation, outbound value checks and by processing asynchronous events.

Based on the above requirements, the iBee node is based on XBee communication module [4] controlled by an Integrated Circuit (IC) from the Atmel modified Harvard architecture 8-bit RISC single-chip microcontroller (AVR) family, which is capable of running the Contiki OS [5]. The later already has support for IPv6 and RPL.

The block diagram of the iBee sensor node is given in Figure 3.

The energy monitor unit is a standalone module, which measures voltages, currents and powers of a 3-phase power system. The module communicates with the central controller unit using the modbus protocol over a RS-485 serial interface.

However, since fast detection of current and voltage faults are essential, a fault-detector module was developed, which trigger an interrupt in the central controller unit.

When the iBee node looses the mains power (power outage) it still must be able to transmit this failure to the DTC using the wireless mesh network. The aim is to provide communication for up to 30s after a power failure. This is achieved using super-capacitors, which will take over the power supply to the central controller unit and the XBee module.

2.1.3 Wireless Mesh Gateway

The WMG was developed at INOV. The WMG was designed around the following requirements:

- IPv6-only gateway;
- RPL Root role;
- Monitoring, detection and repairing any issues related with mesh network;

The block diagram of the Wireless Mesh Gateway is given in Figure 4.

The WMG is composed by two independent modules. The main module is a GNU/Linux based TP-Link MR3020 and the second module is a striped version of iBee node device

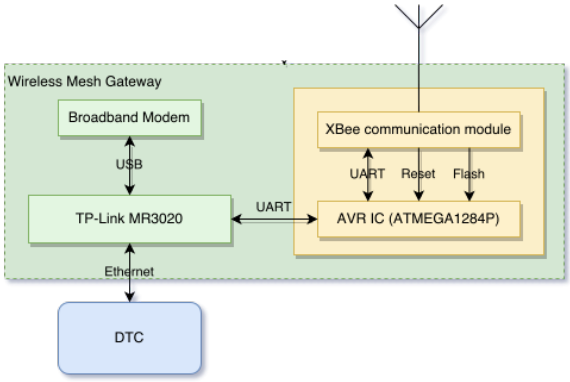

Figure 4. Wireless Mesh Gateway Block Diagram

with the RF-module only. One of the added features is related with communication with secondary module using Serial Line Internet Protocol (SLIP) protocol. This link bridges all packets between RF network and the DTC.

2.2 Requirements

Communication between the DTC and the WSN nodes is based on DLMS. The communication with the DLMS/Companion Specification for Energy Metering (COSEM) server inside each Wireless Mesh Node is encapsulated inside UDP and IPv6 headers. The wireless links of the WMN use 6LoWPAN for IPv6 header compression and make use of the RPL to support multi-hop communication for a robust and self-healing network.

The main goal of this work is to create system that makes possible the acquisition of measurements from LV using low power sensors, using network standard protocols, providing acquisition interfaces highly adopted by industry, maximising availability and reliability of network on power outage situations.

The WMN must be able to detect:

- Voltage outage
- Overload current
- Monitor battery limits
- Out of limits of voltage
- Out of limits of current
- Case temperature

The nodes are designed around the following requirements:

- low-power platform, with 30s last-gasp
- 6LoWPAN support
- RPL support
- Fault detector I/O
- modbus port (also used for debug)
- RF-module (over serial port)

3 System Implementation

3.1 LV Sensor

The LV sensor module is responsible for validating and process the measurements received. For voltage and current measurements, the process classify each value by level, based on a set of thresholds pre-configured on the system. Thereafter, conditional actions may apply depending on values levels.

Voltages are classified using 5 levels:

- Low Voltage
- Low Proximity Voltage
- Nominal
- High Proximity Voltage
- High Voltage

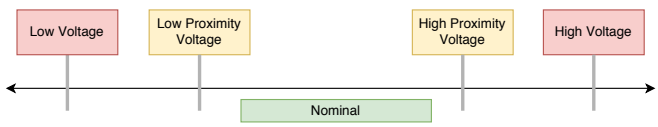

Figure 5. Voltages Thresholds

For currents, only high levels are checked, since no minimal load (current draw) can be considered as a fault. The currents classification uses the following 3 level:

- Nominal
- Low Overload
- High Overload

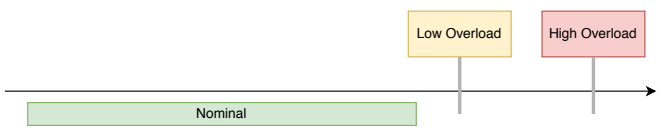

Figure 6. Currents Thresholds

Each boundary in level classification is checked using hysteresis.

3.2 DLMS Server

The design and implementation of the DLMS/COSEM server was surrounded by several software and hardware limitations. Since the DLMS/COSEM specifications are extremely extend, only the minimum required functionalities were implemented. The implementation should use program code instead of RAM memory, given the low memory resources. At the same time, program code should be optimized to allow a compliant implementation of the services and provide acquisition of required measurements.

In this work a novel implementation of a specification compliant DLMS/COSEM server is implemented with a focus on low resource usage. The newly developed DLMS/COSEM server supports 7 different Interface classes (ICs) and has 51 Object Identification System (OBIS) object implemented. The implementation is easily extended and allows to add new OBIS to the set, without a large increase in used resources or efforts.

3.3 CoAP Services

In order to control and setup WMN and WMG internal mechanisms and processes, which are out of scope of DTC operation, it is provided a CoAP interface. The availability of the CoAP services depends on the type of node (WMN or WMG), internal hardware and/or device capabilities. The possible operations available are:

- Get Firmware Release Version
- Reset/Erase persistent data from sensor modules (settings, watchdog counters)
- Force Non-graceful Reboot of the sensor
- Get radio module statistics
- Set radio module transmit power
- Trigger DLMS/COSEM Event Notification service indication
- Get LV Sensor calibration parameters
- Set LV Sensor calibration parameters
- Get Current Fault Detector calibration parameters
- Set Current Fault Detector calibration parameters
- Trigger Radio-frequency Mesh (RF-Mesh) topology re-establishment (RPL repair)

3.4 TimeSync and RPL Parent Probing

Given limited resources in Microcontroller Unit (MCU), in order to get distribute a common time reference within mesh network, a basic broadcast of authority rated time reference was used, directed downwards the mesh tree, using each node's preferred parent as the authority reference. The NTP client for Contiki was already developed and has low overhead on firmware size [6].

Given the mesh availability requirements and the constrained use cases in power outages, it is critical for mesh network nodes to recover quickly. The RPL stability convergence based on mesh network traffic, delays considerably the reactive mechanisms which are required to guarantee mesh availability. In order to allow each node to know the presence of neighbouring nodes, some periodic data exchange between WMN is used, which triggers reactive RPL mechanisms [7]. The module TimeSync was developed for this purpose.

The TimeSync is Contiki process responsible for probing all IPv6 neighbours for each WMN. Since RPL objective functions rely on the packet acknowledgement signal, unicast transmissions are used. To make use of the periodic transmission between nodes, several data is exchanged on probing packets.

Information included in TimeSync frames:

- authority level - analogous to NTP stratum [8]
- seconds - time reference timestamp
- collect period - time interval of debug appliances to be pushed to a data collector
- sink address - IPv6 address of debug data collector

3.5 Wireless Flash

The iBee sensor is to installed in places with difficult physical access, such as high up in a utility pole of the low-voltage energy network, or inside a distribution cabinet. Therefore it must be possible to update the firmware via the wireless interface, but without the need of a working network. This allows the sensor to be updated, even if it has become unresponsive or has not joined a network. This requires the wireless module to be able to reset the controller unit and put it in firmware uploading mode, which is depicted in the Figure 7.

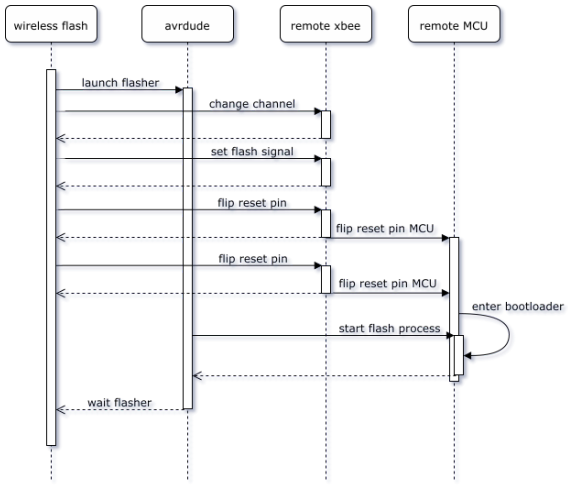

Figure 7. Wireless Flash Sequence Diagram

The XBee Transceiver Module [4] operates independent from the main iBee MCU. Therefore, even if the main iBee MCU locks up or ends up in a boot-loop, it is still possible to take over control via the Wireless Flash interface. The remote Xbee Transceiver Module sets a flash-signal and subsequently resets the iBee MCU. Upon every boot, the MCU boot-loader checks if the flash-signal is set and changes the internal boot-loader to receive the firmware update via the XBee Transceiver Module. The remote Xbee Transceiver resets the flash-signal and then reboots the iBee MCU if the process has ended.

4 System Validation

4.1 Reliability: reboot tests

To test the RPL recovery and correct boot after non-graceful reboots a test-bed was prepared to stress the nodes' hardware. An Arduino is used to control a relay, which switched the power to sensors on and off. The time to all sensors to respond to pings, which can only occur after the sensor has correctly booted and joined the mesh network, was measured. The sensors were rebooted 1000 times and successfully recovered every time.

Table 1
Reboot Test Time Results

Sensor	Average	Std Deviation
Root Node (Sensor 5c60)	20.521s	4.838
Leaf #1 (Sensor c99d)	21.493s	5.728
Leaf #2 (Sensor c95a)	22.276s	9.880
Leaf #3 (Sensor c999)	23.095s	7.130

The normalization delay of the RPL root is given in Table 1. The delay until the root replies to pings is justified by the bootstrap time of the root node, which includes the setup of the SLIP interface, initialization of the IPv6 prefix, update of the system time and the RPL initialization. As soon as the root node finishes the bootstrapping, leaf nodes can join the RPL mesh and all nodes start replying to pings consistently along reboots.

4.2 System Performance and availability

Each WMG is responsible to monitor a set of nodes. A special module was developed for the gateway to present an overview of the active mesh nodes and report the results of the mesh network activity statistics. The generated page is shown in Figure 8, where it can be seen that the bandwidth to each active node (mesh depth larger than 0) never surpasses the limit of 2.4kbit/s.

A mechanism for polling a set of sensors was defined to evaluate the availability of the sensors in the network. This mechanism was used while the system was operating, therefore it could not be too intrusive. The polling period for this mechanism was therefore set to 2 minutes, whereas the normal operation uses one minutes interval. The test was performed during the entire month of May 2017, where 8 sensors from one network were polled and 4 from another.

The test duration of a month (of 31 days) leads to each sensor being polled 22320 times. Each time a node was polled, a IC7 with load profile and IC3 with Total Positive Active Energy were requested. An attempt was only recorded as successful, when both requests give the proper response. The results of this test also allowed to obtain the success ratio within the expected sample count, as shown in Table 2.

Table 2
Measurements Availability Results

Sensors Count	Samples Count	Overall ratio
0	42	0.188%
1	2	0.009%
3	1	0.004%
4	1	0.004%
6	4	0.017%
7	5	0.022%
8	32	0.143%
9	19	0.085%
10	43	0.192%
11	434	1.944%
12	21724	97.329%

The Table 2 shows that 21724 times out of 22320 all 12 sensors responded correctly, 434 times one sensor did not respond and in 42 cases none of the sensors responds correctly. This gives an availability for the entire network of 97.33% and a single sensor availability, the probability that a sensor responds successfully to the 2 requests of 99.75%.

5 Demonstrator

The WSN node is depicted in Figure 9 and contains a circuit developed by INOV, which includes processing and communication modules, voltage/current fault detectors and a temperature sensor. The author proposed to use the Contiki OS running on a low-cast Atmega MCU with at least 128kB of flash for the Wireless Mesh Node. The WSN nodes developed in e-Balance Project are based on the the XBee Wireless Transceiver implementing the IEEE 802.15.4 physical layer, operating in the 868 MHz frequency band. The author also proposed to use a commercially of the shelf TP-Link MR3020 (OpenWRT capable device), for the Wireless Mesh Gateway, adapted to use with the XBee transceivers. These modules support a raw RF data rate of 24 kbit/s. This results into 2.4 kbit/s of usable data rate due to the mandatory duty cycle of 10%. The radio range in urban environments can reach a few hundreds of meters, which is easily extended using multi-hop communications between the WSN gateway and the most distant nodes if needed.

OpenWrt

Mesh Nodes

This page gives an overview over currently active mesh nodes.

Statistics

Node	IP	RTT (ms)	Bandwidth	Inbound (avg/min)	Outbound (avg/min)	Depth
2001:470:1f09:90e:213:a200:40a2:9311	2001:0470:1f09:090e:0213:a200:40a2:9311	0.00	0.00 b	0.00 B (0.00 Pkts.)	27.20 B (0.40 Pkts.)	0
fd06:ef:acec:1ab:100::d1c	fd06:00ef:acec:01ab:0100:0000:0000:0d1c	0.00	0.00 b	35.20 B (0.40 Pkts.)	35.20 B (0.40 Pkts.)	0
pl0.pt054.ebalance.sgwg.inov.pt	2001:0470:1f09:090e:0213:a200:40a2:9302	248.57	2.12 Kb	131.20 B (1.60 Pkts.)	133.20 B (1.60 Pkts.)	1
pl1.pt054.ebalance.sgwg.inov.pt	2001:0470:1f09:090e:0213:a200:408b:c95a	249.58	2.18 Kb	131.20 B (1.60 Pkts.)	133.20 B (1.60 Pkts.)	1
pl2.pt054.ebalance.sgwg.inov.pt	2001:0470:1f09:090e:0213:a200:408b:badf	251.43	1.90 Kb	131.20 B (1.60 Pkts.)	133.20 B (1.60 Pkts.)	1
pl3.pt054.ebalance.sgwg.inov.pt	2001:0470:1f09:090e:0213:a200:40a2:930f	307.79	1.37 Kb	109.60 B (1.40 Pkts.)	154.80 B (1.80 Pkts.)	1
pl4.pt054.ebalance.sgwg.inov.pt	2001:0470:1f09:090e:0213:a200:40a2:92ee	0.00	0.00 b	0.00 B (0.00 Pkts.)	27.20 B (0.40 Pkts.)	0
pl5.pt054.ebalance.sgwg.inov.pt	2001:0470:1f09:090e:0213:a200:40a2:9166	249.83	2.17 Kb	109.60 B (1.40 Pkts.)	154.80 B (1.80 Pkts.)	1
pl6.pt054.ebalance.sgwg.inov.pt	2001:0470:1f09:090e:0213:a200:40a2:9297	248.99	2.18 Kb	109.60 B (1.40 Pkts.)	154.80 B (1.80 Pkts.)	1
root.pt054.ebalance.sgwg.inov.pt	2001:0470:1f09:090e:0213:a200:408b:c99e	63.97	22.04 Kb	35.20 B (0.40 Pkts.)	35.20 B (0.40 Pkts.)	0

Powered by LuCI 15.05-107-gd7fcad5 Release (git-16.039.17758-db16465) / OpenWrt Chaos Calmer 15.05

Mesh Status | Administration

Figure 8. Gateway Mesh Nodes: Overview web page

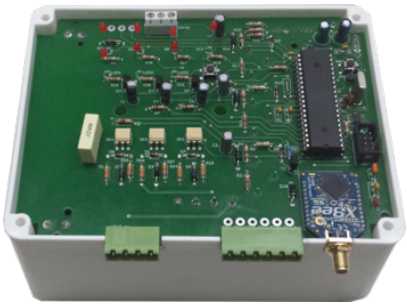

Figure 9. Internals of the Wireless Mesh Node

The WSN gateway (see Figure 10) connects to the DTC through an Ethernet port. The gateway is also equipped with a XBee transceiver and a protocol conversion driver has to be implemented. A 3/4G module is included in the gateway to allow remote access for testing and management purposes, but is not required to operate the WMN.

The developed system was evaluated in a realistic test-bed installed in the Batalha region of Portugal [9]. Two gateways are installed in

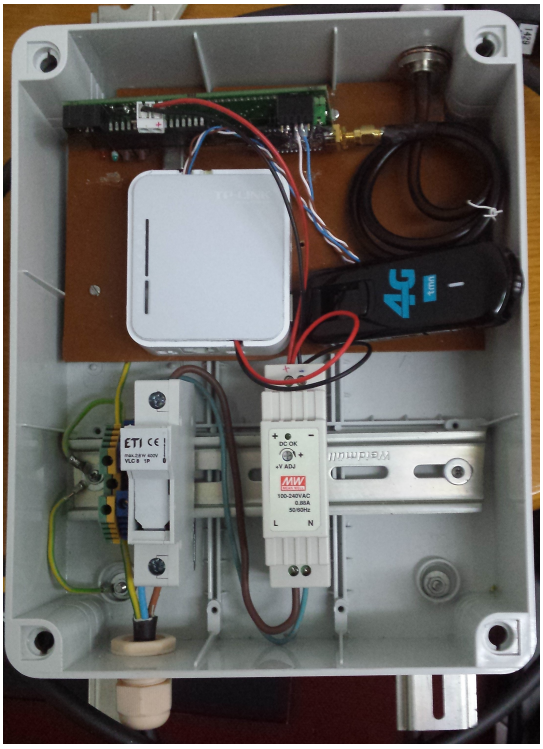

Figure 10. Internals of the Wireless Mesh Gateway

two Secondary Substations, see Figure 11 and Figure 12, monitoring 3 different circuits with a total of 15 Wireless Mesh Nodes.

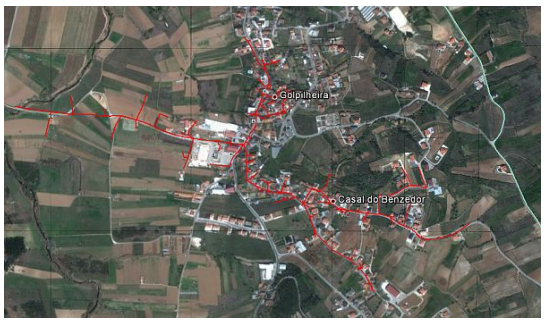

Figure 11. Demonstrator with the secondary substation at Golpilheira

Figure 12. Demonstrator with the secondary substation at Jardoeira

6 Conclusion

This work describes a wireless LV grid monitoring solution for DSOs, allowing to manage and maintain complex LV grid layouts and changing energy demands. The work is part of an European funded FP7 project, called e-Balance. The solution involves a newly developed sensor and gateway, which form the basis for a WSN monitoring system. The nodes are typically deployed in distribution cabinets along the streets or in energy poles of the electrical circuits from the secondary substations.

The sensor supports 3 different configurations are supported (single phase, 3 or 4 phases) from the same code-base. The sensor implements a standards compliant DLMS/COSEM server, which implements 51 OBIS objects using 7 different interface classes.

The performance of the WSN was considered very good, taking into account the foreseen applications. A typical round-trip time (RTT) of 270.21 ms per hop is obtained, leading to an effective throughput of 2.1 kbit/s. A retransmission mechanism implemented at the DLMS level, allowing a maximum of 2 retries per packet, ensuring a success ratio was higher than 99%.

The system developed in this work has undergone extensive testing in a real-life demonstrator for a prolonged time period. The wireless monitoring system was extremely well received by the project reviewers from the European Commission, which was confirmed during the final project review.

In the current implementation, if a WMG looses power, all the child nodes are unaccessible. It creates a shadow zone of the grid. However, it's a feature of RPL that nodes can join different mesh networks, but these are assigned different IPv6 addresses. In order to nodes keep being identified as same sensor but with different address, a new registration and joining mechanism should be in place in Supervisory Control and Data Acquisition (SCADA) application layers.

References

[1] eBalance Consortium, "ebalance project website," 2017, accessed: 2017-11-07. [Online]. Available: https://http://ebalance-project.eu/

[2] "DLMS User Association," accessed: 2017-11-07. [Online]. Available: http://www.dlms.com

[3] T. Winter, P. Thubert, A. Brandt, T. H. Clausen, J. W. Hui, R. Kelsey, P. Levis, K. Pister, R. Struik, and J. Vasseur, "Rpl: Ipv6 routing protocol for low power and lossy networks," *Work In Progress), http://tools. ietf. org/html/draft-ietf-roll-rpl-19*, no. July, pp. 1–164, 2011. [Online]. Available: http://scholar.google.com/scholar?hl=en{&}btnG=Search{&}q=intitle:RPL:+IPv6+Routing+Protocol+for+Low+power+and+Lossy+Networks{#}0

[4] "XBee-PRO 868 - Digi International," accessed: 2017-11-07. [Online]. Available: http://www.digi.com/products/xbee-rf-solutions/modules/xbee-pro-868

[5] A. Dunkels, B. Grönvall, and T. Voigt, "Contiki - A lightweight and flexible operating system for tiny networked sensors," *Proceedings - Conference on Local Computer Networks, LCN*, pp. 455–462, 2004.

[6] J. Lusticky, "Contiki NTP Client," Ph.D. dissertation, Brno University of Technology, 2012.

[7] S. Dawans, S. Duquennoy, and O. Bonaventure, "On link estimation in dense RPL deployments," *Proceedings - Conference on Local Computer Networks, LCN*, pp. 952–955, 2012.

[8] D. Mills, J. Martin, J. Burbank, and W. Kasch, "RFC 5905 - Network Time Protocol," *Internet Engineering Task Force (IETF)*, pp. 1–111, 2010. [Online]. Available: http://www.rfc-editor.org/info/rfc5905

[9] J. P. Almeida, "D6.3 deployment of demonstrators," eBalance Consortium, Tech. Rep., 2017.