TÉCNICO LISBOA

DEEC
DEPARTAMENTO DE ENGENHARIA ELETROTÉCNICA E DE COMPUTADORES
TÉCNICO LISBOA

Redes e Instalações Eléctricas

Electrical and Servicing Systems

João G. R. Garcia
(joaogrgarcia@tecnico.ulisboa.pt)

Summary

To do today….

- Discussion project program
- Analysis of distributed elements (drawings)
- Examples of Energy Distribution
- Examples of External Influences classification
- General use of Dialux Evo (next class to do calculation and luminaire selection)
- Topics on energy distribution and sources

References

Electrical Installation Guide

- Chapter A – General Rules of Electrical Installation Design
  - (pages A1 – A7 and A11 – A23)

- Chapter D – MV & LV Architecture Selection Guide for Buildings
  - (pages D1 – D33)

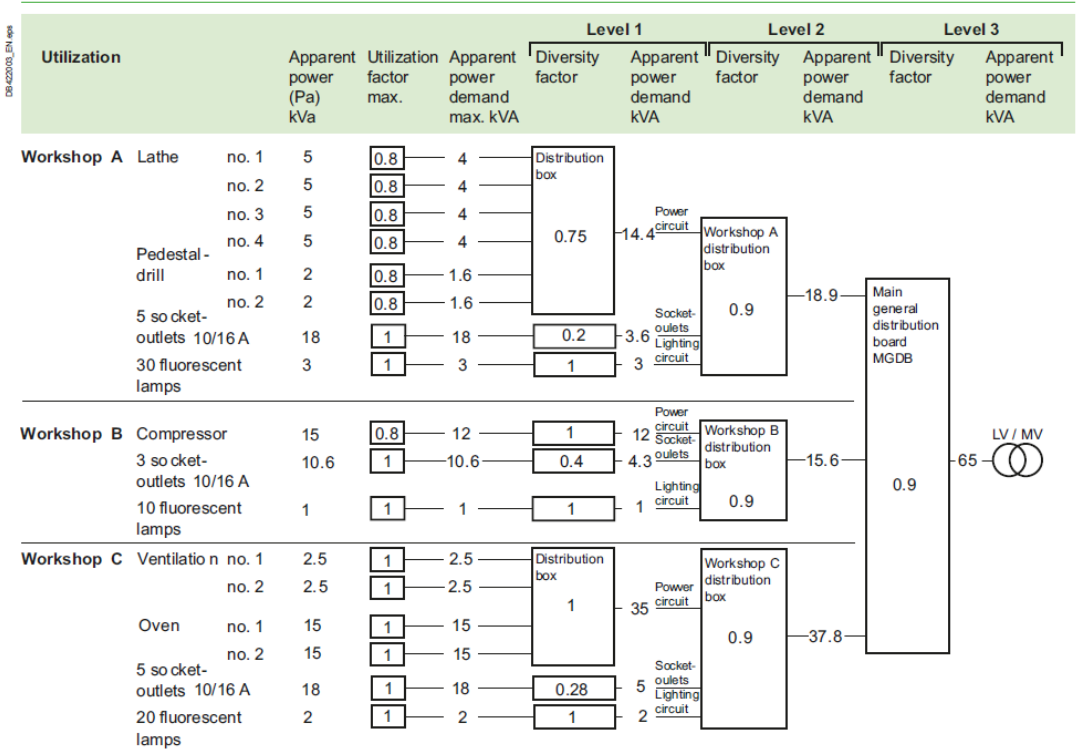

Fig. A15 An example in estimating the maximum predicted loading of an installation (the factor values used are for demonstration purposes only)

Circuit function		Diversity factor (ks)
Lighting		1
Heating and air conditioning		1
Socket-outlets		0.1 to 0.2 [a]
Lifts and catering hoist [b]	■ For the most powerful motor	1
	■ For the second most powerful motor	0.75
	■ For all motors	0.60

[a] In certain cases, notably in industrial installations, this factor can be higher.
[b] The current to take into consideration is equal to the nominal current of the motor, increased by a third of its starting current.

Fig. A14 Diversity factor according to circuit function (see UTE C 15-105 table AC)

Type of load	Assumed loading factor
Distribution - 2 and 3 circuits	0.9
Distribution - 4 and 5 circuits	0.8
Distribution - 6 to 9 circuits	0.7
Distribution - 10 or more circuits	0.6
Electric actuator	0.2
Motors ≤ 100 kW	0.8
Motors > 100 kW	1.0

Fig. A13 Rated diversity factor for distribution boards (cf IEC61439-2 table 101)

MV – Building

Prefabricated or custom

MV – Aerial Substation

Up to 250kVA

MV – LV transformers

The IEC standard for power transformers is IEC 60076.

Apparent power kVA	In (A) 237 V [a]	410 V [a]
100	244	141
160	390	225
250	609	352
315	767	444
400	974	563
500	1218	704
630	1535	887
800	1949	1127
1000	2436	1408
1250	3045	1760
1600	3898	2253
2000	4872	2816
2500	6090	3520
3150	7673	4436

[a] transformer **no-load** voltage.

Fig. A16 Standard apparent powers for MV/LV transformers and related nominal output currents

Diesel generators

Static UPS

Design phases

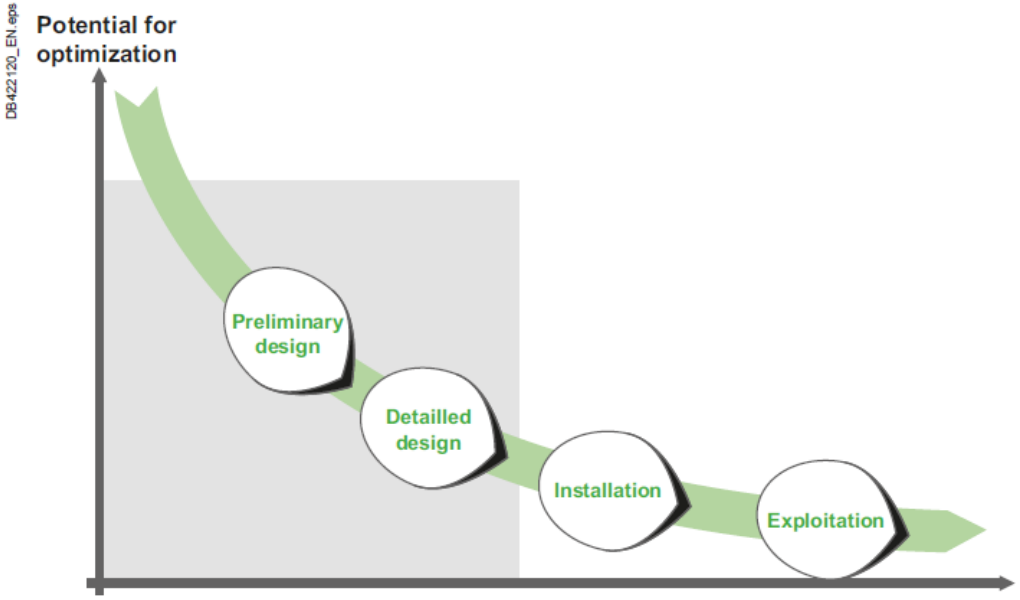

Fig. D1 Optimization potential

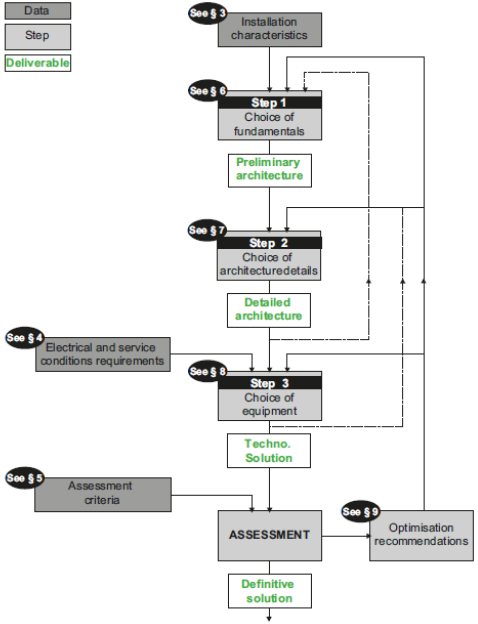

Distribution architecture

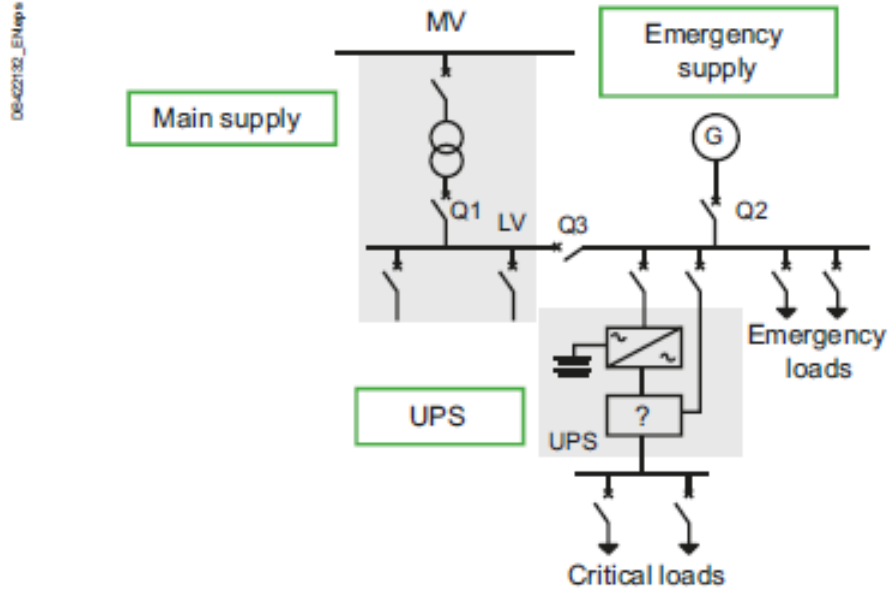

Fig. D18 Connection of a back-up generator

UPS connection

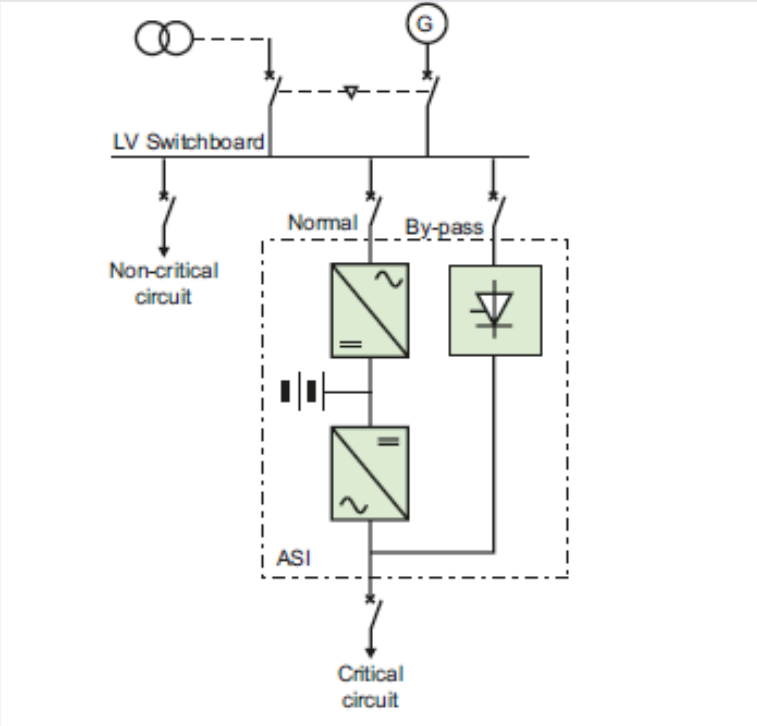

Centralyzed vs Distributed distribution

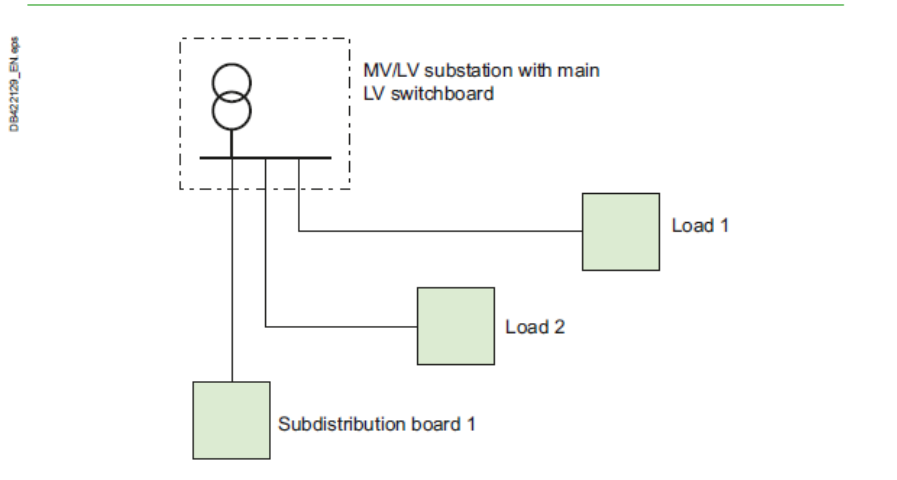

Fig. D14 Example of centralized layout with point to point links

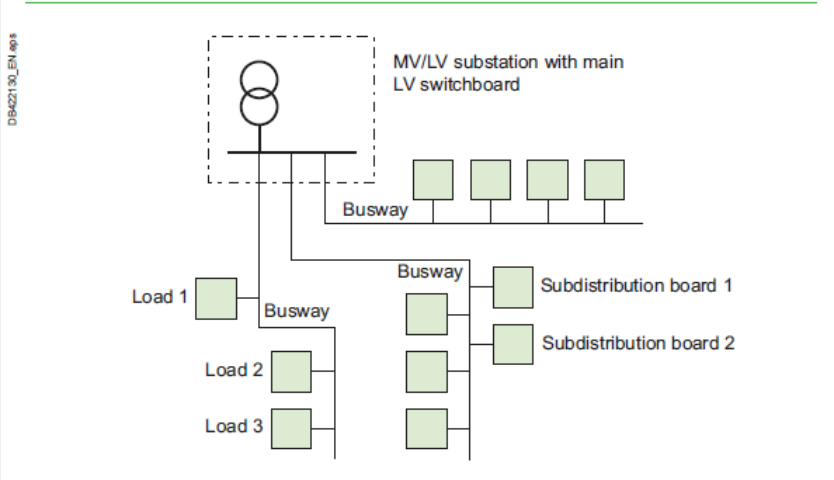

Fig. D15 Example of distributed layout, with busway

On-line extra

https://secureidentity.schneider-electric.com/

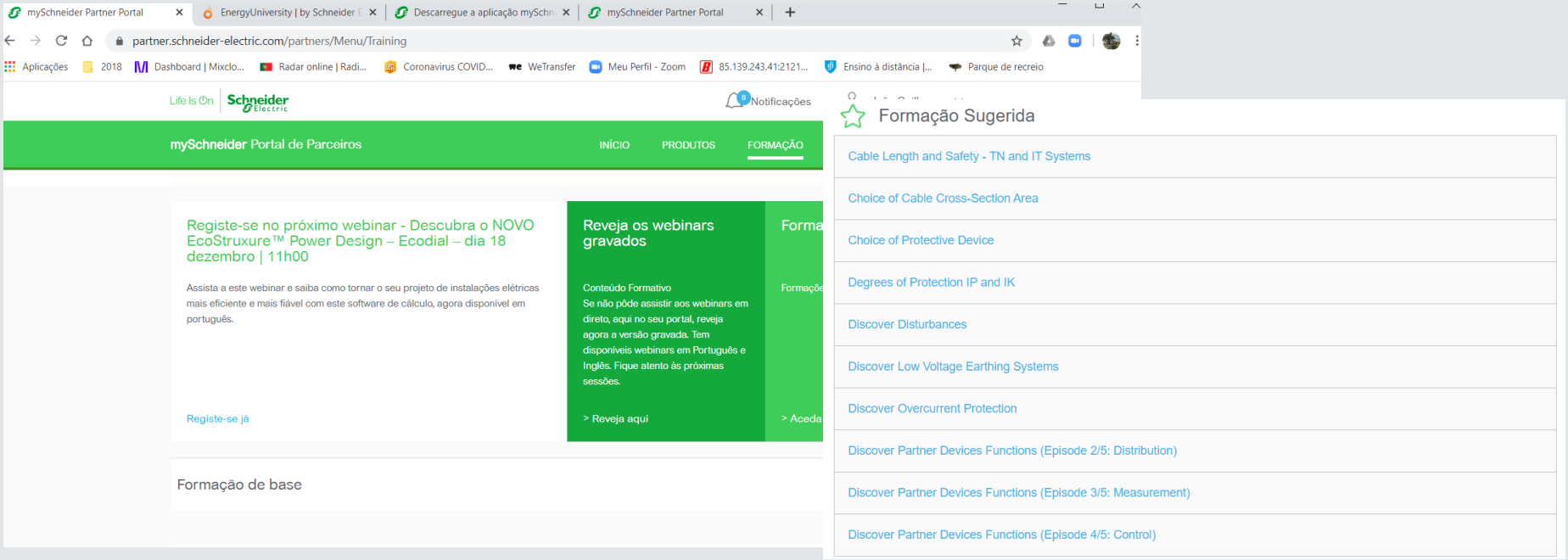

On-line extra 2

https://www.schneideruniversities.com/catalog/topic/24

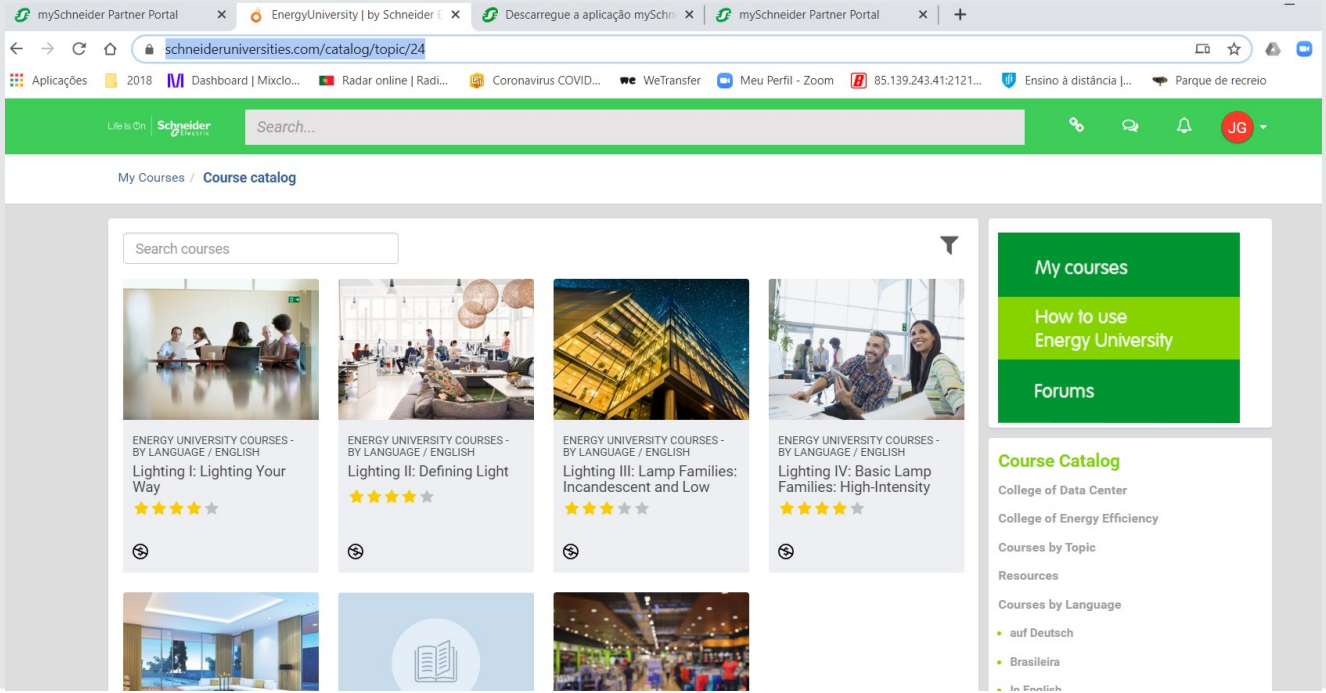

Bibliography

Rules to grid connection

On Fénix: EDP Distribuição_Manual Ligações à Rede_jun2018.PDF

Energy Distribution

Radial

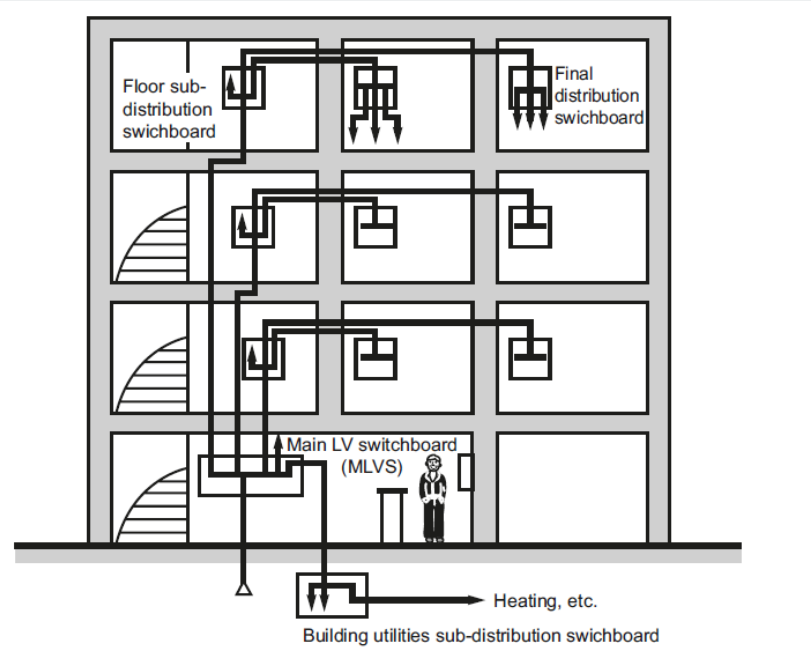

Energy Distribution

Line

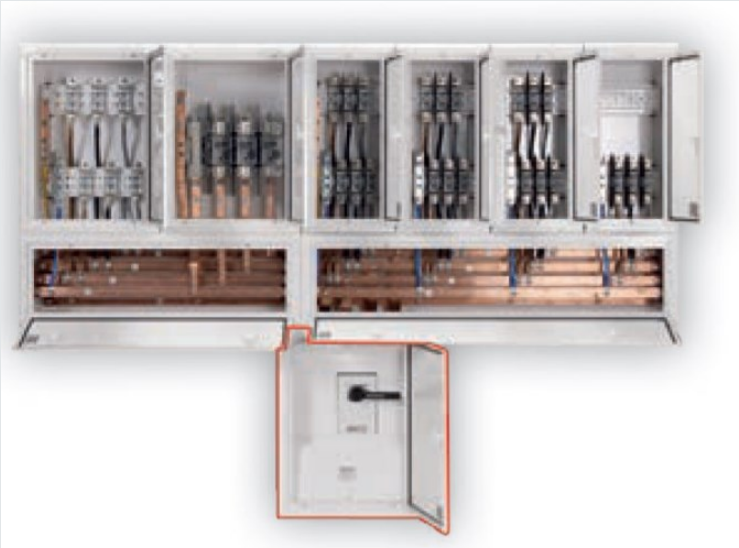

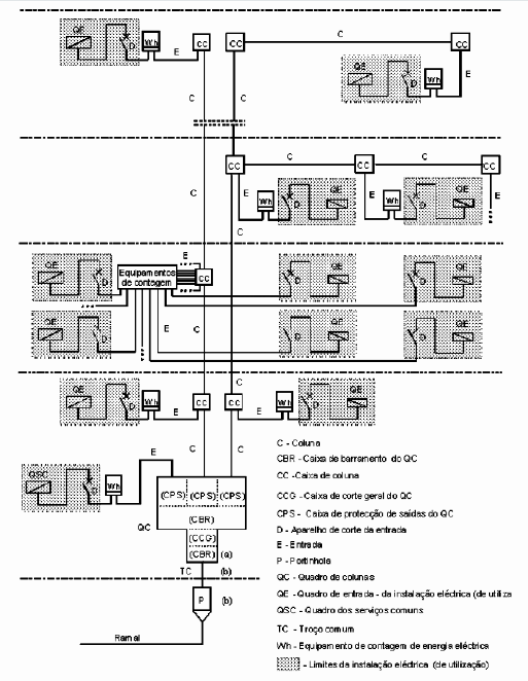

Where to put the paths?

- Common areas
- Accessible

Cabling Distribution

Locations

- Floor
- False ceiling
- Floor
- False floor
- Embebbed
- At sight

Support

- Cable Trays
  - Steel
  - PVC
- Ducts
- Trunking
  - Aluminiun
  - PVC

Connections to grid

General LV

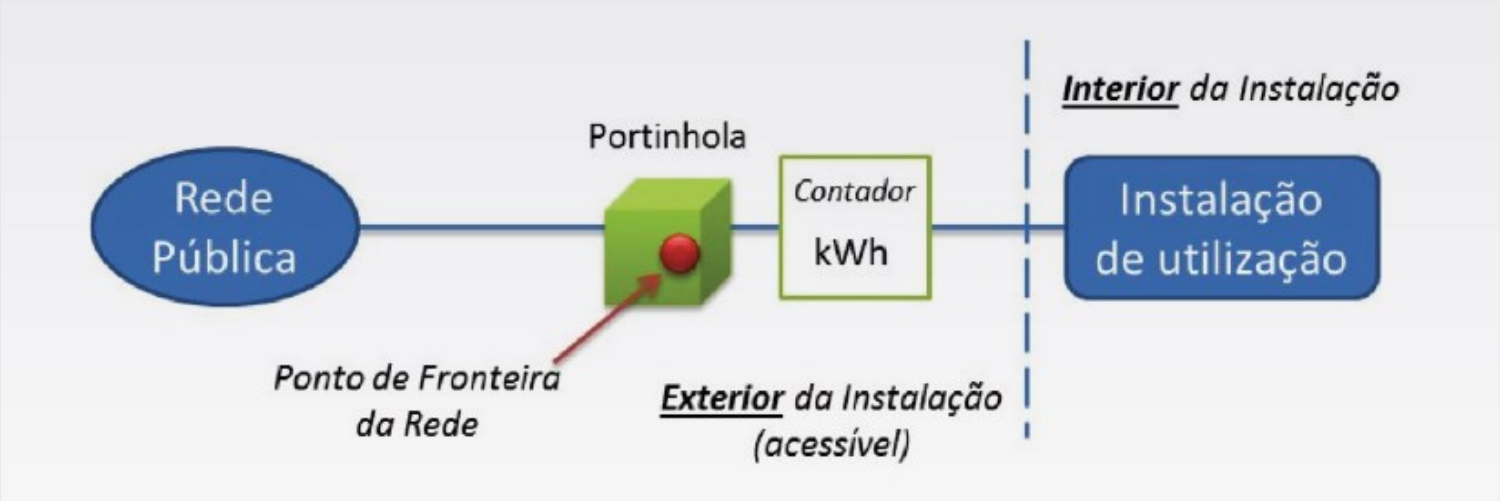

Standardized connections

Monofásico		Trifásico	
P (kVA)	In (A)	P (kVA)	In (A)
1,15	5	6,90	3 x 10
2,30	10	10,35	3 x 15
3,45	15	13,80	3 x 20
4,60	20	17,25	3 x 25
5,75	25	20,70	3 x 30
6,90	30	27,60	3 x 40
10,35	45	34,50	3 x 50
13,80	60	41,40	3 x 60

Buried vs Aerial

Interface

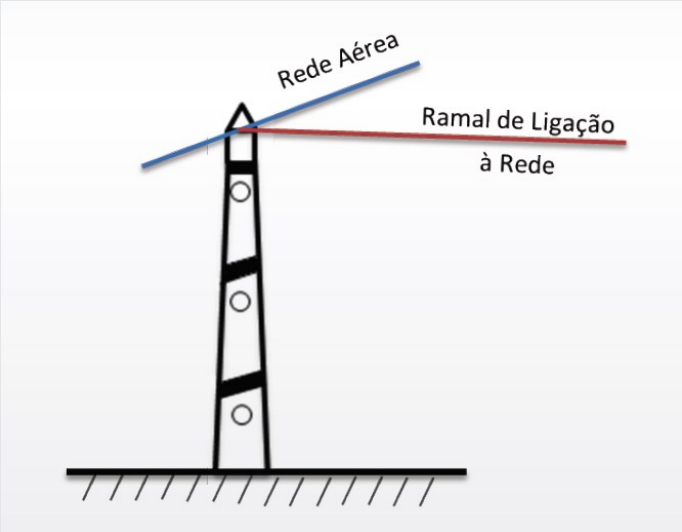

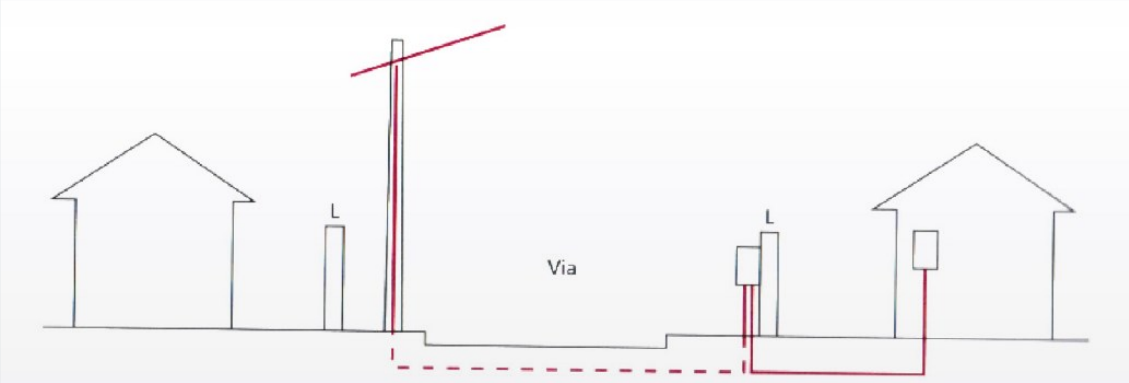

Interface Distributor - Client

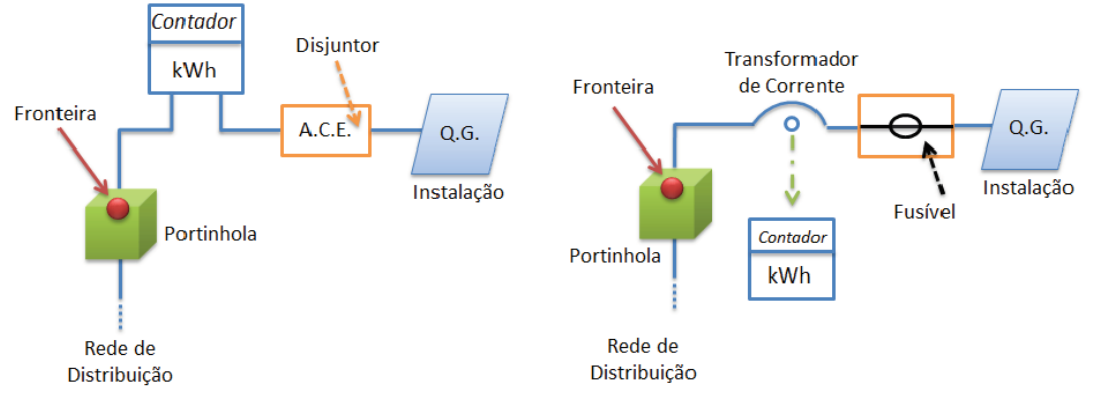

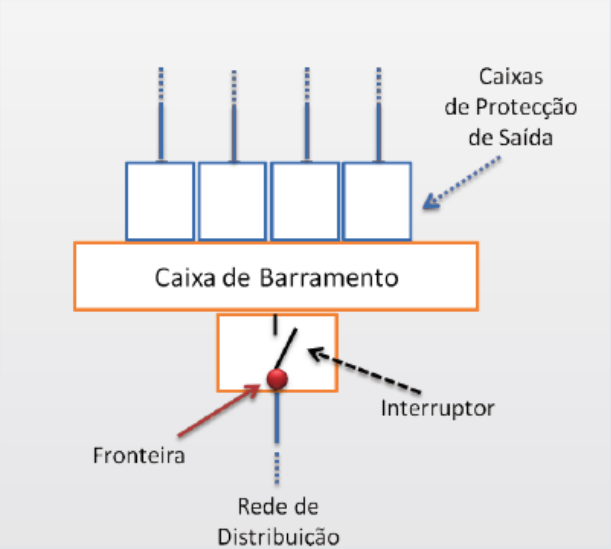

LV - Aerial - Type 1

Connection in garden wall

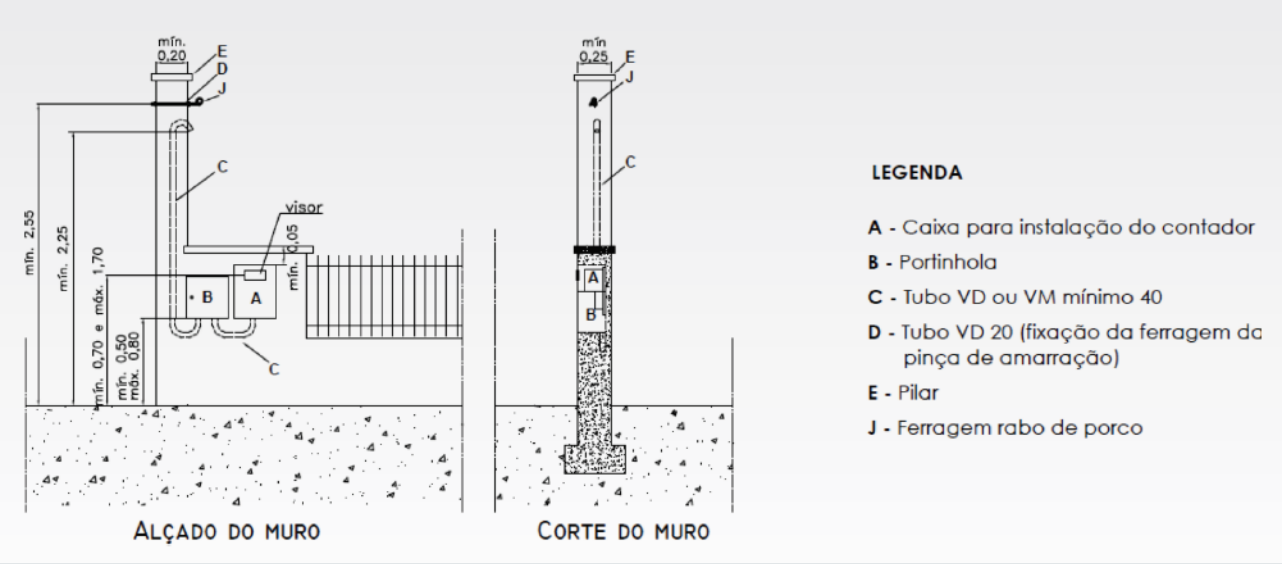

LV - Aerial - Type 2

Connection in façade

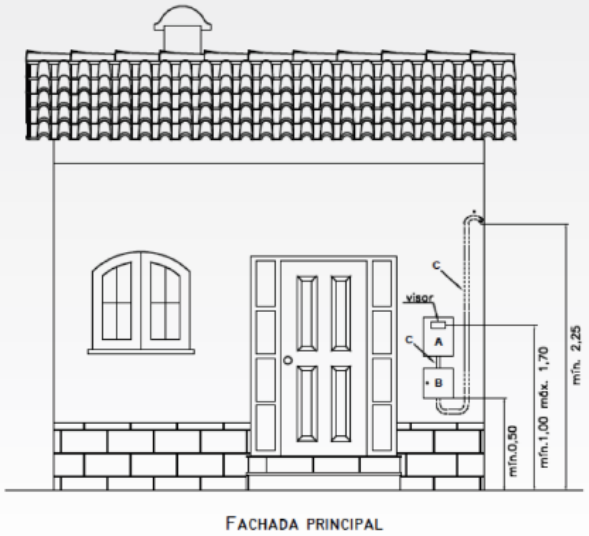

LEGENDA:

A - Caixa para instalação do contador
B - Portinhola
C - Tubo VD ou VM mínimo 40

LV - Buried - Type 1

Connection in garden wall

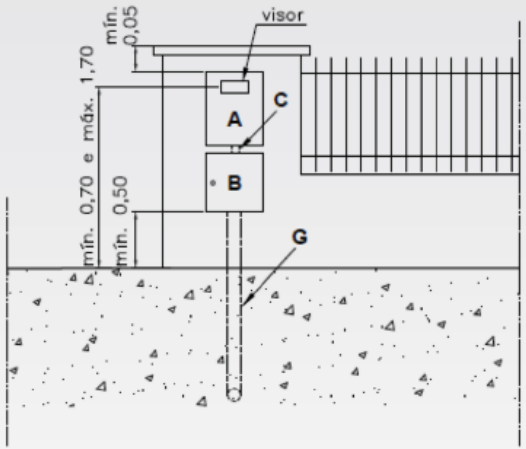

ALÇADO DO MURO

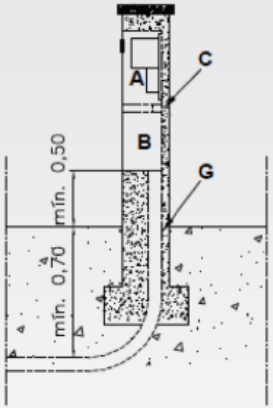

CORTE DO MURO

LEGENDA:

A - Caixa para instalação do contador

B - Portinhola

C - Tubo VD ou VM mínimo 40

G - Tubo PEAD 63 mm e IK 08

(em alternativa ao PEAD, dentro do muro poderá ser utilizado o tubo PVC com PN 6)

LV - Buried - Type 2

Connection in garden wall

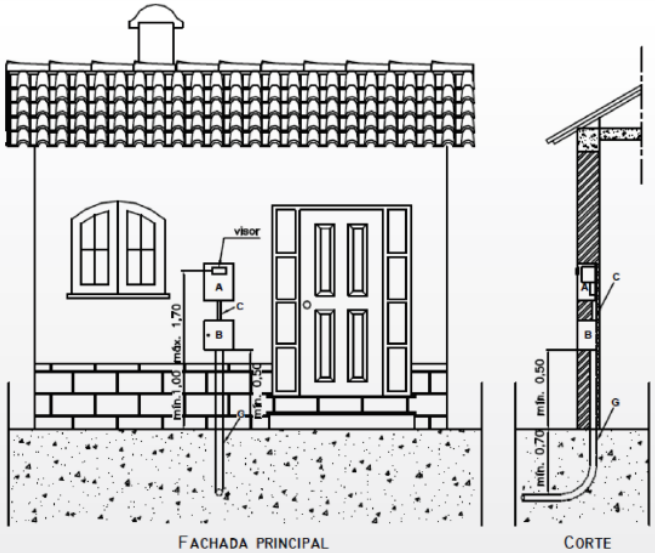

LEGENDA:

A - Caixa para instalação do contador

B - Portinhola

C - Tubo VD ou VM mínimo 40

G - Tubo PEAD 63 mm e IK 08

(em alternativa ao PEAD, dentro do muro poderá ser utilizado o tubo PVC com PN 6)

LV Collective buildings
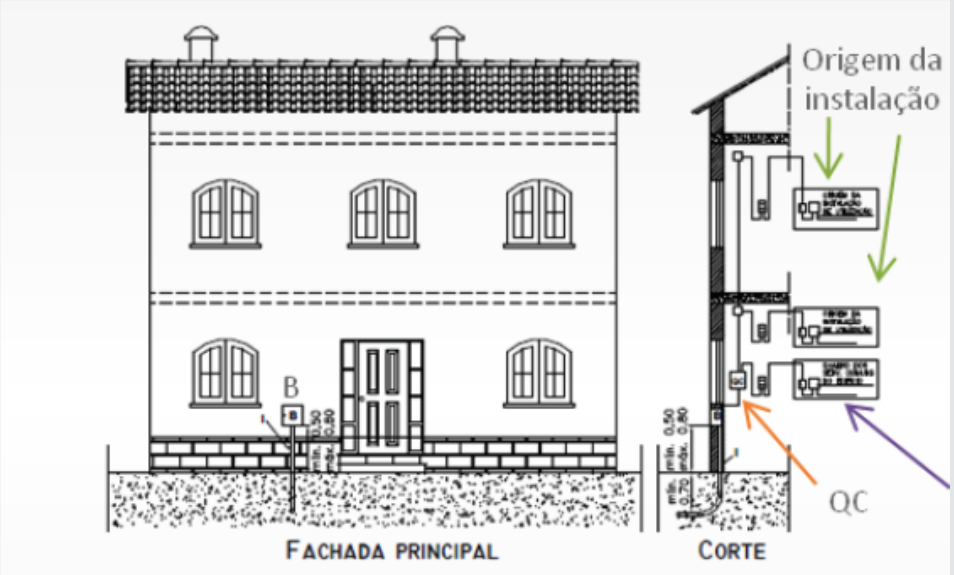
General case