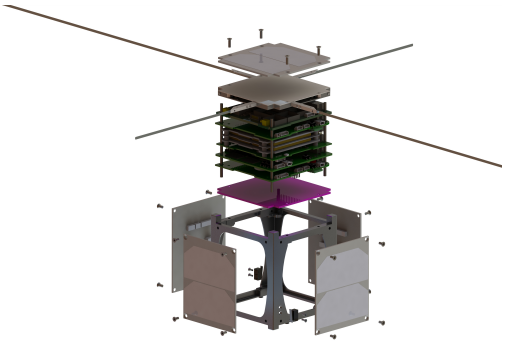

Debris Mitigation, Assembly, Integration, and Test, in the context of the ISTsat-1 project

Paulo Luís Granja Macedo

Thesis to obtain the Master of Science Degree in

Aerospace Engineering

Supervisors: Prof. Paulo Jorge Soares Gil
Prof. Agostinho Rui Alves da Fonseca

Examination Committee

Chairperson: Prof. José Fernando Alves da Silva
Supervisor: Prof. Paulo Jorge Soares Gil
Member of the Committee: Prof. Elsa Maria Pires Henriques

November 2018

Dedicado ao meu Pai, Mãe e Irmã

Acknowledgments

I want to thank my supervisors, Professor Paulo Gil and Professor Agostinho Fonseca, for guiding me thorough the project. I also want to thank the ISTsat-1 team members, both professors and students, for giving me the opportunity to be part of such a great project and for the availability they had for my questions.

The project would not happen if we did not have the University help and the ESA initiative Fly Your Satellite. I want to thank both organizations, that provided and will keep providing financial support, development rooms, test facilities and expertise in Space related matters.

I want to thank all the other people that helped me through this phase, my fiends and girlfriend, thank you.

Também quero agradecer aos meus pais e irmã, que me ajudaram em tudo o que foi preciso para chegar a este dia, sem eles não seria possível. Obrigado.

Resumo

O ISTsat-1 é um *CubeSat* desenvolvido por estudantes e professores do Instituto Superior Técnico (IST), com a ajuda de um programa da ESA chamado *Fly Your Satellite* (FYS). O objectivo principal é educar estudantes em ciência e tecnologia espacial. A missão é de estudar a viabilidade de uma antena plana com elevado campo de visão, que recebe sinais ADS-B de aeronaves.

O ambiente onde o *CubeSat* irá orbitar faz com este seja susceptível a erros mecânicos e eléctricos, por isso planos de qualidade terão de ser implementados. Estes providenciam confiança que o sistema cumpre os requisitos de missão, através de planeamento e implementação de métodos. O objectivo desta tese é de detalhar esses planos.

Um desses planos mitiga a criação de lixo espacial. Este é efeito secundário da exploração espacial. A implementação deste plano é essencial para assegurar um futuro seguro para satélites que orbitam a Terra e pessoas que exploram o Espaço.

Outro elemento crucial para o sucesso de uma missão espacial é a sua montagem, integração e verificação. Este plano foi implementado de acordo com os padrões da indústria espacial, e incluem verificações ao nível do componente, subsistema e sistema, tanto em condições terrestres, de lançamento e espaciais.

Finalmente, o procedimento de montagem e integração para o *CubeSat* foi detalhado.

O trabalho realizado é um plano de montagem e verificação, podendo ser reutilizado em futuros projetos com o mesmo âmbito.

Palavras-chave: ISTsat-1, *CubeSat*, Lixo Espacial, Montagem, Integração, Verificação

Abstract

The ISTsat-1 is a 1U CubeSat developed by students and professors of Instituto Superior Técnico (IST), with the help from an ESA backed program called Fly Your Satellite (FYS). Its main goal is to educate students into space science and technology. The mission is to perform a feasibility study of a wide field-of-view patch antenna built at IST, which receives ADS-B signals from aircraft.

The space environment makes spacecraft susceptible to functional and mechanical failures, so quality assurance plans shall be considered. They provide confidence that the design fulfils all mission requirements, by planning and implementing verification methods. This Thesis scope is to provide such quality assurance plans.

One of those plans mitigates the creation of space debris. They have become an unintended side-effect of space exploration. These measures are essential to ensure a safe future for the spacecraft orbiting the Earth and the Humans that choose to explore it.

Another crucial element for a spacecraft program success is its assembly, integration and verification phase. This plan was implemented according to space industry standards, that included verification at component, subsystem and system level, and at ambient, launch and environmental conditions.

Finally, the assembly and integration procedure was detailed. It provides a step-by-step procedure of the final CubeSat assembly. The plan provides details about equipment, handling and wiring.

The work performed plans the assembly and verification campaign, and can be reused for future CubeSat projects with the same scope.

Keywords: ISTsat-1, CubeSat, Space Debris, Assembly, Integration, Verification

Contents

List of Tables

List of Figures

List of Acronyms

ADCS Attitude Determination and Control System

ADS-B Automatic Dependent Surveillance - Broadcast

AIT Assembly, Integration and Test

AIV Assembly, Integration and Verification

CAN Controller Area Network

CCV Closed Circuit Voltage

CDH Command and Data Handling

COM Communication

COTS Customer Off-The-Shelf

DET Direct Energy Transfer

DISCOS Database and Information System Characterizing Objects in Space

DOA Dead On Arrival

DRAMA Debris Risk Assessment and Mitigation Analysis

DRAMA-ARES DRAMA - Assessment of Risk Event Statistics

DRAMA-CROC DRAMA - Cross Section of Complex Bodies

DRAMA-MIDAS DRAMA - MASTER (-based) Impact Flux and Damage Assessment Software

DRAMA-OSCAR DRAMA - Orbital Spacecraft Active Removal

DRAMA-SARA DRAMA - Re-entry Survival and Risk Analysis

ECSS European Cooperation for Space Standardization

EGSE Electrical Ground Support Equipment

EM Engineering Model

EMC Electromagnetic Compatibility

EPS Electric Power System

EQM Engineering Qualification Model

ESA European Space Agency

ESD Electrostatic Discharge

FDS-VCD FYS Design Specification - Verification Control Document

FFT Full Functional Test

FM Flight Model

FS Flight Spare

FYS Fly Your Satellite

GEO Geostationary Orbit, with mean altitude of 35786 km

GS Ground Station

GSE Ground Support Equipment

I/O Input/Output

I2C Inter-Integrated Circuit

IGRF International Geomagnetic Reference Field

ISS International Space Station

IV Current-voltage

LEO Low Earth Orbit, with an altitude below 2000 km

LV Launch Vehicle

MCC Mission Control Center

MGSE Mechanical Ground Support Equipment

MLI Multi Layer Insolation

MPPT Maximum Power Point Tracking

MRO Mission-Related Object

NASA National Aeronautics and Space Administration

NCR Non-Conformance Report

OBC On Board Computer

OCV Open Circuit Voltage

PA Product Assurance

PCB Printed Circuit Board

PFM Proto-Flight Model

PL Payload

POCC Payload Operations Control Center

PROP Propulsion

PV Photo Voltaic

QA Quality Assurance

QM Qualification Model

RAM Random Access Memory

RBF Remove Before Flight

RFD Request For Deviation

RFT Reduced Functional Test

RFW Request For Waiver

RID Review Item Discrepancy

ROM Read-Only Memory

S/C Spacecraft

SDRAM Synchronous Dynamic Random-Access Memory

SoC State of Charge

SOCC Spacecraft Operations Control Center

Space Object Man-made space system, including its components and fragments

Space System Spacecraft and launch vehicle orbital stages

SPI Serial Peripheral Interfaces

SSN Space Surveillance Network

STR Structure and Mechanisms

TC Thermal Control

TSTP Test Specification and Test Procedure

TS-VCD Technical Requirements Specification – Verification Control Document

TTC Telemetry, Tracking and Command

U/V UHF/VHF

UHF Ultra High Frequency

VHF Very High Frequency

Chapter 1

Introduction

Twenty years ago, space exploration was only possible for large organizations, dependent on public funding. Now, space is also available to private companies and university research groups. They have less funding, human resources and are more time sensitive. To combat such challenges, new strategies were developed. Buying Customer Off-The-Shelf (COTS) components, limiting the testing phase and reducing spacecraft size became norm [1]. This converged into a concept known as CubeSat, a standardized design of a small spacecraft.

1.1 The ISTsat-1 Mission

The ISTsat-1 team at Técnico, Lisbon, in conjunction with the European space Agency (ESA) initiative Fly Your Satellite (FYS) is designing, manufacturing and testing their first CubeSat. Its launch is planned for the beginning of 2020, and has an expected mission time of almost one year. Since the major purpose of this project is educational, most subsystems will be made internally. COTS components will be used only in sensitive and high risk subsystems. Besides this objective, the team has a planned mission: to receive and characterize ADS-B (Automatic Dependent Surveillance - Broadcast) signals from aircraft in areas not covered by ground stations.

1.2 Scope

In this thesis, the product assurance plans of the ISTsat-1 team are developed. They are particularly important due to the lack of team experience in space related missions and the relatively low success rate of CubeSat missions. The product assurance plans consist of verification methods that try to find and mitigate all risks foreseen during the spacecraft timeline, and also prove design and functional requirements. The procedure of the spacecraft assembly, integration, and how it will be handled, stored, transported and maintained is also detailed, as it is essential for a successful mission.

To mitigate the creation of space debris, a danger for all future space missions, a thorough analysis was also performed regarding the ISTsat-1 spacecraft.

1.3 Small Satellites

From the smallest man-made satellite launched, known as Sprite ChipSat, measuring 3.5 by 3.5 centimetres and weighing five grams, to the largest, the International space Station (ISS) with more than 350 square meters of habitable space and weighing more than four hundred thousand kilograms, satellites come in different sizes and weights [2, 3]. A general classification of satellites based on their mass can be seen in Table 1.1. Note that the estimated cost and time of development varies according to various factors such as mission complexity, team experience and number of COTS components bought.

Table 1.1: Satellite classification by mass [4].

Type of Satellite	Mass (kg)	Estimated Cost (US $)	Time of Development from Proposal to Launch (Years)
Large	>1000	0.1 - 2 B	>5
Medium	500 - 1000	50 - 100 M	4
Mini	100 - 500	10 - 50 M	3
Micro	10 - 100	2 - 10 M	∼1
Nano	1 - 10	0.2 - 2 M	∼1
Pico	0.1 - 1	20 - 200 k	<1
Femto	<0.1	0.1 - 20 k	<1

From Table 1.1, we can see that small satellites take less time do develop and also cost less. In these conditions, space related academia and private research with low budgets can be reached. The small satellite revolution brought with it PocketQubes, SunCubes, TubeSats, ChipSats and CubeSats. PocketQubes and SunCubes can be compatible with the CubeSat design specification and multiples of them can fit inside of a CubeSat. TubeSats and ChipSats have another approach. TubeSats are cylindrical, with 8.9 cm in diameter and length of multiples of 12.7 cm. They also have a dedicated deployer which are less expensive and complicated than what a CubeSat would use. ChipSats are circuit boards that fit in a CubeSat which deploys them [5]. Although the design of these small satellites are specified, the CubeSat is the most mature technology and the most used.

CubeSats are Pico or Nanosatellites, with mass and size that comply with the most recent CubeSat Design Specification. They are multiples of 10 cm x 10 cm x 10 cm cubes and maximum mass of 1.33 kg. A MU CubeSat has a multiple M of that size and mass, for example, a 3U CubeSat would be 10 cm x 10 cm x 30 cm and have a maximum mass of 4.00 kg. While the standard applies up to 3U CubeSats, there has been others that did not follow the norm, as one can see from Figure 1.1. In the Figure, not launched CubeSats means that they have an announced launch year but weren't launched yet.

The database of Figure 1.1 has over 500 distinct organizations that are designing or already launched at least one CubeSat [5]. Around 60% are universities, 20% private companies and the remaining military, non-profit or agencies. Regarding numbers of CubeSats being designed, built or already launched, around 50% are from companies, 35% universities and the remaining military, non-profit or agencies.

Typically, CubeSats are composed of Printed Circuit Boards (PCBs), stacked on top of each other and held in place using an adequate structure. Each PCB has its own function and can be classified

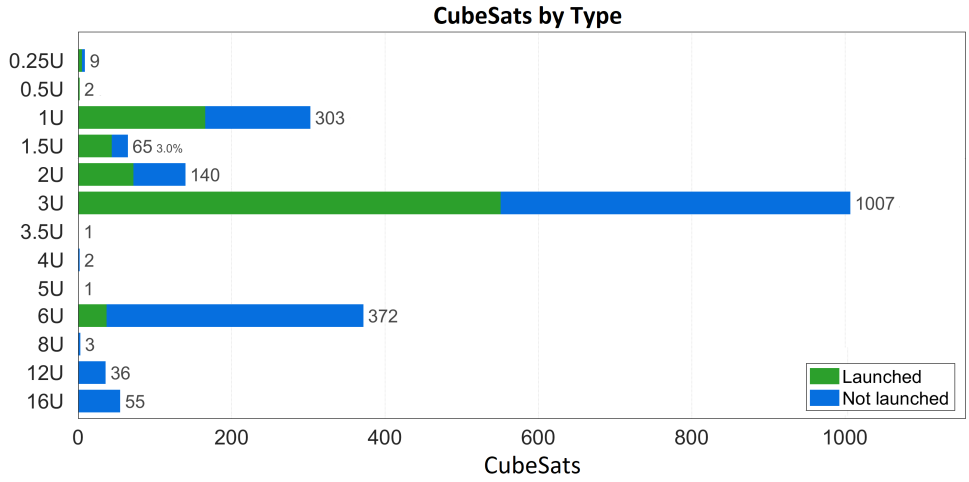

Figure 1.1: Number of CubeSats by type as of 24 May, 2018 [5].

as a subsystem. They are connected through a common power bus and one or more data buses. Generally, such connections use the PC/104 architecture. An example of this implementation can be seen in Figure 1.2a. With a 90 by 96 millimeters form factor, low power consumption and self-stacking bus of 104 pins made CubeSat developers embrace this technology [6]. Since the majority of CubeSats use COTS products, having a standard used broadly is important for the modularity and integration of different COTS manufacturers or custom-made PCBs.

Currently, some space qualified COTS products are available for buying. This means that they underwent functional testing, vibration in higher levels than expected during launch and thermal vacuum cycles with a higher range of temperatures than the ones expected in space. Additionally, some COTS products went into space a number of times and performed their mission successfully that they achieved flight heritage. Note that there is no flight heritage outside of the mission usage (e.g. a different orbit could imply other temperatures or radiation level). Ideally, when choosing a COTS product, the developer should search for space-qualified and flight-heritage ones. Depending on the mission risk that the developer is comfortable with, he should have a more/less extensive testing plan. He could also buy pre-tested products or test them himself. When buying in bulk, COTS products shall be from the same manufacturing lot to diminish differences between items. At a minimum, integration and functional testing shall be performed when assembling the subsystems together.

With the standardization of CubeSat dimensions, deployment of also standardized deployers was possible. Beginning with Cal Poly's P-Pod, now other deployers such as NanoRacks and ISISpace are on the market [7–9]. An ISISpace deployer example can be seen in Figure 1.2b. The working principle is common to all deployers. They are containers with a door and spring mechanism. CubeSats are pressed against the spring and then the door is closed. Once the deployment is ready, a signal is sent to the deployer, the door opens and CubeSats are launched into space. To guide them, the internal walls have rails compatible with the CubeSat external dimensions. In order to prevent cold welding while in space, both the rails of CubeSats and internal guiding rails of deployers are anodized.

While the deployment mechanisms are similar, the capacity and external dimensions are not. P-Pod has a 3U series capacity and that means it can hold three 1U, one 1U and a 2U or one 3U CubeSat in

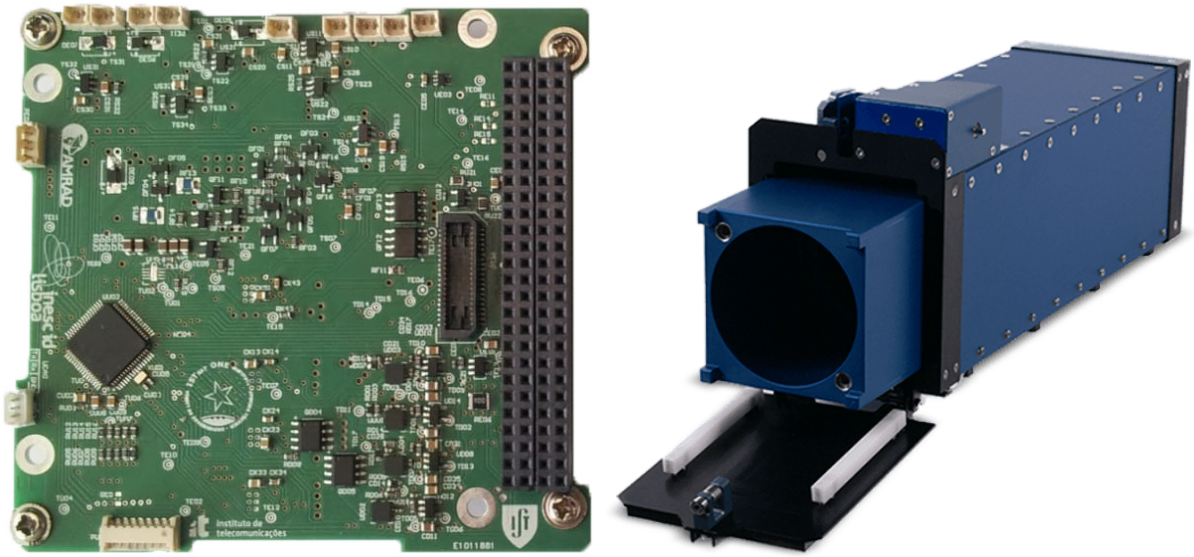

(a) PC/104 form factor in an ISTsat-1 subsystem. (b) ISIPod 3U CubeSat deployer [10].

Figure 1.2: Examples of equipment discussed.

a single line. The NanoRacks deployer has a 6U series capacity. ISISpace has multiple series and/or parallel combinations, of up to 16U capacity. Depending on the deployer, CubeSat requirements can be different. For example one requires at least one CubeSat power inhibit switch, while another requires three [7, 8, 10]. In the mission design phase, CubeSat developers shall look for this requirements and, if choosing the deployer is not possible at that time, design the mission for the worst-case scenario of the deployer requirements.

1.4 CubeSat Subsystems

Subsystems, both in CubeSats and conventional satellites, follow a general division as: Attitude Determination and Control System (ADCS), Command and Data Handling (CDH), Communications (COM), Electric Power System (EPS), Payload (PL), Propulsion (PROP), Structure and Mechanisms (STR) and Thermal Control (TC) [11]. The purpose and functionalities of each subsystem is described in the rest of Section 1.4.

1.4.1 Attitude Determination and Control System

Spacecraft attitude is how it is oriented in space. When the spacecraft carries a directive antenna or the payload has to be pointed to some specific direction or by other reason, it has to know first where it is pointing. Then, it has to act on the information received and recheck if the actuation was sufficient. A feed-back loop with the desired and obtained attitude is indispensable for the proper functioning of most spacecraft. Alike in conventional S/C, different CubeSats have different attitude accuracy needs. While solar panels need four to ten degrees, telescopes and cameras need less than 0.1º of accuracy. If there is a high need for accuracy, sensors such as sun-sensors or star-sensors can be used. If not, sensors such as Earth horizon seekers or magnetometers are used. The need for redundant sensors

and for constant attitude determination made the combination of distinct sensors standard in spacecraft. Sensors usually used are listed and described bellow. This section mostly come from course notes, referenced on [12].

Magnetometers measure the Earth's magnetic field intensity in one direction. With an orthogonal three axis magnetometer, the three components of the magnetic field are obtained. Then, knowing the S/C position and with a map of the Earth's magnetic field intensity, a partial attitude measurement is obtained. The map is generally given by the International Geomagnetic Reference Field (IGRF) model [13]. Another sensor is needed to compute the S/C attitude because there is a missing degree of freedom, the direction. To combat this predicament, another sensor has to be used in parallel. Sensor accuracy may vary due to random noise, biases, electrical activity in the S/C and others. Also, far from Earth, the magnetic field is too week to be detected or the noise from other space entities makes measurements unpredictable. This means that magnetometers are used mostly in LEO (Low Earth Orbit). Since the accuracy is relatively low, they are generally used in parallel with other sensors that are more accurate. They are widely used in CubeSat missions due to the miniaturization and low cost os COTS solutions available on the market.

Gyroscopes measure the inertial angular rate of the S/C. This means that they output a rate of change of the S/C attitude, and not its vector. At least another sensor is needed as reference level, for calibration and to remove error accumulation. They are useful for fast attitude changes and provide attitude determination when other sensors, that require observation of objects like stars, do not have a direct line-of-sight with their target. For the same reason as the magnetometers, they are broadly used in the CubeSat community.

Earth sensors adopt the Earth disk as a source of attitude determination by observing two bands, visible and infra-red. Depending on the attitude control and orbit altitude, different sensors are used. They can be horizon crossing indicators if the S/C is at LEO and static Earth sensors if the S/C is at GEO (Geostationary Orbit). For spin stabilized S/C, horizon crossing indicators measure the time of passage and frequency of rotation around the Earth. Two sensors mounted with different angles scan the Earth. They will have distinct intervals of scan time, which correspond to different Earth widths and attitude. For actively attitude controlled S/C, the sensors have a steerable crossing indicator. Instead of moving the S/C, the sensor has a scanning motion that looks for Earth. On the other hand, the static Earth sensor detects Earth disk displacements on a focal plane. S/C rotations produce a temperature difference in four sensors, meaning that the S/C should turn in the direction of the highest temperature measured. They are mostly used in bigger CubeSats due to their size.

Sun sensors detect the Sun direction for Sun pointing or attitude determination functions. In the second case, another sensor has to be used. They are composed of photovoltaic elements at different positions and inclinations or masked with holes or slits where light can pass through. Difference in voltages across sensors returns the sun direction. They are commonly used in CubeSats, and they generally come incorporated in COTS solar panels. Star sensors have the same basic principle of functioning. They have image star fields on a focal plane and determine the S/C attitude by comparing the image seen with the on-board stored star catalogues. Typically, they have a higher resolution than

Sun sensors but they are bigger, heavier and more computational savvy, which limits their use throughout the CubeSat community.

The S/C attitude can be controlled passively or actively. In the CubeSat community, the shift has been towards the active control. The main actuators used in spacecraft are listed and described bellow. Gravity gradient is a passive control system that exploits the stabilization effects of gravity torque. It uses deployable booms with a mass on its top. Since magnetic forces decay to the square of distance, a torque is created, stabilizing a S/C. The best part of this technology is that it does not use electrical energy. But, it also has disadvantages such as, if the deployable boom malfunction there is no S/C attitude control and it needs another actuator for all axis stabilization. At least one CubeSat was launched into space with this control technology, a 3U called ExoCube [14]. Permanent magnets are also passive attitude control systems. They use hysteresis cycles to damp S/C rotational kinetic energy, producing heat in the process. They have been used successfully in a 3U CubeSat called RAX-2 [14].

Magnetorquers are active control systems. They have rods or coils that create magnetic fields when there is electrical current passing through them. These magnetic fields interact with Earth's, providing a torque to the S/C. By controlling its intensity, the S/C can damp its rotational speed when there is electrical power. This means that, in theory, they could work indefinitely as long as there is solar power. This system is widely used in the CubeSat community due its simplicity, low cost, weight and power needed. They generally come incorporated in COTS solar panels if the costumer requests it.

Other existing active control systems are reaction wheels, momentum wheels and control momentum gyros. While some of these systems have a wheel always spinning, others only have it spinning when it is necessary to perform a torque. By increasing or decreasing the rotation speed, the S/C is rotated. Although there is a possibility of using these approaches on CubeSats, we did not find any mission that utilized these systems. Their high cost, weight and size contribute for this scenario. Another active control system uses thrusters. Although it is typically the active system with the better accuracy, it needs fuel, propeller tanks and it is expensive. Only a few CubeSats used such equipments.

The future of spacecraft ADCS is dependent on research, that will improve CubeSat mission capabilities [15].

1.4.2 Command and Data Handling

The Command and Data Handling (CDH) subsystem is responsible for controlling and configuring of the S/C, optimizing overall system performance and processing data for transmission. The CDH does that by storing housekeeping data, formatting telemetry data, receiving watchdog pulses, performing periodical diagnostics of the other subsystems and controlling the remaining subsystems using commands. Such commands can be pre-programmed or sent from a ground station. In the second case, they are then demodulated and decoded in the COM subsystem, and then sent to CDH. With the program stored in memory, the CDH now performs the task commanded by the ground station.

S/C data processing and storage require the use of microprocessors, memories and interface devices. They shall have low power dissipation, volume and mass without sacrificing performance and be tolerant to faults [16]. The design process of the CDH shall size the system to their use, define

operational modes and interfaces and then select the architecture to be used. While sizing the system is dependent on each spacecraft, operational modes are more standardized. Each S/C has a initial mode of operations. This mode focus on initializing the subsystems after deployment from the deployer, diagnosing the S/C and the deployment of mechanisms for communications, attitude control or energy. Another mode of operations is the normal mode. This is the typical operation of the S/C, all subsystems nominal, gathering of housekeeping data, periodic diagnostics and others. When there is an anomaly in a subsystem, and it cannot solve the problem, the CDH tries to solve it using pre-programmed protocols. If the problem persists, and the problem can lead to mission loss, a safe mode is activated [17]. In this mode, all the non-essential subsystems are turned-off. While in conventional S/C, this mode can alternate between different redundant hardware, in the CubeSat community and due to size, weight and cost constraints, these problems are typically solved with a software change or reset.

Inputs for the CDH are conglomerated in data known as housekeeping data. It contains information that each subsystem receives from their respective sensors, such as solar panel voltage and current, temperature, battery charge, magnetometers, and others. Each subsystem then sends this data to CDH. Then, values are compared with the expected range they should have. If some value is not within that range, a flag or error is logged in the data that will be sent into a ground station. If the value indicates a hardware failure that could jeopardize the mission, the S/C goes into safe mode.

Inputs arrive at the CDH through one or more Input/Output (I/O) devices. These can be serial or parallel, watchdog timers or bus interfaces [13]. While serial ports send one bit at a time, parallel send one word composed of several bits at a time. Watchdog timers are periodic messages sent from each subsystem to the CDH. When it does not send a message in the expected time, the CDH will try to communicate with it and restart it if necessary. Communication buses can be Inter-Integrated Circuit (I^2C), Serial Peripheral Interfaces (SPI) or Controller Area Network (CANbus). The I^2C bus is the most used in the CubeSat community because it has a distributed system, most peripherals needed can be COTS and uses low power, although it relatively slow. SPI and CANbus interfaces are also used in the community, specially when there is a need for a higher data rate [18].

Spacecraft systems use memory storage such as Read-Only Memory (ROM), Random Access Memory (RAM) and solid state memories. These last can be Synchronous Dynamic Random-Access Memory (SDRAM) or flash memories [13, 19]. ROM and flash memories are non-volatile, meaning they do need power to keep their information. They are used to store the programming code, applications and critical data. The others are faster but need a constant power supply to keep their information. They are used to keep data temporarily. One problem in space is the radiation coming from the Sun. Flash memories tend to be more influenced to this radiation in comparison with the remaining systems. Since CubeSats generally go into LEO and their mission is less than three years, flash memory is not influenced a worrying level. Flash, SRAM and RAM are mostly used in the community in conjunction [20].

1.4.3 Communications

The Communication subsystem of a S/C has the functions of receiving and demodulating data from a Ground Station (GS) via a command link and transmitting recorded and real-time data to a GS via a data

or telemetry link [11]. Communication between the GS and S/C is important because, without it, no data can be exchanged between them and the S/C is nothing more than space debris. The subsystem shall be able to decode commands sent from the GS and ask the CDH to execute it as soon as possible, on a time delay or after a pre-commanded sequence events [13]. The generalized communication subsystem is composed of an antenna, a receiver/demodulator, command decoder and command processor.

The radio-frequency (RF) is sent from the GS and arrives at the S/C antenna. In conventional S/C, this frequency is on the S, C or Ku band but, for the CubeSat community, it is mostly on VHF (Very High Frequency: 30 MHz - 300 MHz), UHF (Ultra High Frequency: 300 MHz - 3 GHz) and S band (2 GHz to 4 GHz). In order to get almost world cover, most CubeSat developers from universities transmit in amateur frequencies so that, everyone with a fairly basic GS, can listen, decode and report what the S/C sent [21]. The RF travels to the S/C receiver/demodulator. It has the task of capturing, amplifying demodulating and sending the signal to the command decoder. The demodulation has to happen because the GS previously modulated it on the RF message. Its function was to insert data into the radio wave. By increasing the amplitude, changing the frequency or phase accordingly to a sequence of bits, voltage pulses can be obtained and then up-converted to the desired radio frequency. Then, the command decoder looks at the frequency obtained and transforms it in a series of bits. Then, these bits are validated against a data base in the command processor. If the message is valid, it is redirected to the CDH subsystem [13].

The S/C can also respond to the GS by using the inverted method described for the reception. Both reception and transmission, and both in the ground and in the space segment, use certain communication protocols. These are translations of series of bits into useful information. They also cover S/C or GS identification, authentication, error detection and correction. Conventional S/C launched from ESA and NASA missions use advanced protocols, focused on accuracy and security. In the CubeSat community, one the most used protocols is the AX.25 frame [21]. It is used due to its simplicity and community support.

1.4.4 Electric Power System

The Electric Power System of a S/C provides regulated energy to all subsystems and stores excess energy. A failure in the power supply could imply mission loss and that makes reliability the primary requirement of this subsystem [13]. The general system architecture is composed of a primary energy source, energy converter, power control and regulation, distribution and storage [11].

Typically, the primary energy source is solar. Other systems not using solar cells have to carry their own energy such as primary batteries, fuel cells, chemical or nuclear. Primary batteries are non-rechargeable and used in low power, short life-span S/Cs in the order of days. Fuel cells increase the S/C life-span to a few weeks, requiring a constant supply of fuel (e.g. electrochemical reaction with hydrogen and oxygen). Chemical or nuclear can provide the S/C with kilowatts of power. Chemical can provide short-life burst power missions while nuclear can provide relative constant power for decades. Chemical and nuclear are used in missions where the S/C explores outer planets and sun power is reduced [11].

Energy conversion using solar energy is done using Photo Voltaic (PV) cells stacked in series or parallel configurations. The photon energy is converted to d.c. power according to a current-voltage (IV) curve that is characteristic to each PV cell. The power depends on sun exposure, PV cell efficiency and S/C attitude control. Most conventional S/C use deployable solar panels but, in the CubeSat community, the typical mission has body mounted solar panels. On CubeSats, generally only a few watts are necessary for the mission, the attitude control is not accurate and deployable solar panels are more expensive and subject to failures in the deployment [22].

Power coming from the solar panels is then controlled and regulated. There are at least two ways of doing that, by Direct Energy Transfer (DET) or Maximum Power Point Tracking (MPPT). The first method goes to a predetermined voltage point in the IV curve and shunts excessive power. While it is simple, it is not as efficient as the MPPT. The second method retrieves the maximum power from the cells, because it will dynamically change its voltage point according to the solar panel voltage. The disadvantage of the MPPT is that it is more complicated and reacts slowly to power surges but it is widely used nowadays in the CubeSat community [23]. COTS products enable cheap and reliable MPPTs.

The power is now distributed to all subsystems, regulated on a voltage and limited current. In the CubeSat community, it is typical to use the PC104 buses to transfer such energy. With that being used, no visible power wires are necessary between the EPS and the remaining subsystems. Excessive energy is stored in rechargeable batteries to use during the Earth eclipse or when sun power is not enough to power the S/C. Most CubeSats use Lithium-Ion or Lithium-Polymer type batteries, although some use Nickel-Cadmium or Lithium-Chloride batteries [23]. Lithium batteries need to be proper charged and discharged to survive the mission lifetime. Parameters such as temperature and state of charge influence when to charge and discharge the batteries. Heaters are used when the batteries are not within their operational temperature range and their state of charge is kept as high as possible, with the S/C shutting down when there is low battery charge [24].

1.4.5 Payload

Each S/C has their own specific payload for the mission or missions that they plan to accomplish. Some past CubeSat mission categories include astronomy, atmospheric science, biology, Earth observation, electronics, materials, space weather and telecommunications [25]. Some of these payload end up being manufactured after successful mission, and then sold as COTS products with flight heritage.

1.4.6 Propulsion

Most conventional S/C need propulsion systems to place themselves into the pre-determined orbit, to maintain or change their orbit, to control their attitude or even perform end-of-life manoeuvres [13]. Propulsion systems are classified by their nature of use (e.g. launch, attitude control, orbit adjustment), type of energy (chemical, electric, nuclear) and by the propellant phase (liquid, solid or hybrid). All of these systems use kinetic energy to produce thrust. While electric systems can provide thrust for a long period of time and allow for large fuel energy densities, its intensity is much smaller than traditional

chemical propellants. With the increase of solar panel efficiency and the appearance of all-electric communication S/C, the development of electric propulsion is gaining momentum. Future complex missions, requiring formation flying and low-cost, reliable and safe electric propulsion systems influence that momentum [26]. Other than missions IMPACT and BricSat-P, propulsion on CubeSats was only used for attitude control with cold gas propulsion systems [27].

1.4.7 Structure and Mechanisms

The Structures and Mechanisms subsystem involves the frame to mount and link the various hardware components such as other subsystems, deployment and launch mechanisms [11]. While conventional S/C have custom structures, the CubeSat standard guides the making of COTS structures. Companies like ISISpace, EnduroSat, ClydeSpace and others, are selling 1U up to 16U structures, most with flight heritage and space qualified at the consumer request.

Some mechanical requirements shall be followed by CubeSat structures, such as external dimensions of Figure 1.3, rail minimum width of 8.5 mm and maximum roughness of $1.6\,\mu m$, material used limited to aluminium 7075, 6061, 5005, and/or 5052, stand-off and rails hard anodized and the use of separation springs [7]. Note that the 1U CubeSat standard dimension on the +Z axis is 11.35 cm while we previously told it was 10 cm. The added stand-off height is necessary to make sure that, when the CubeSats are inside of the deployer and being launched into space, the vibrating +Z or -Z faces do not reach the deployer walls or other CubeSat faces. Most of these requirements are in place to provide a good separation between the deployer and the S/C. The limit on rail roughness provides less friction, hard anodization prevents cold welding with the deployer and separation springs provides separation between CubeSats when they are inside of the deployer and in a series configuration. Figure 1.3 represents the 1U CubeSat standard dimensions. The access port represented has the purpose of charging the S/C while it is in the deployer and shall be in its +X face. Not represented in the figure are the separation springs and deployment switches. Each CubeSat has a pair of those items, crossed diagonally in the -Z face of the S/C. CubeSat structures shall also have in account electrical requirements. For the P-Pod, the S/C shall be turned off when inside of the deployer and, for that purpose, it shall have at least one deployment switch on the -Z face and a Remove Before Flight (RBF) pin entry in the +X face [7].

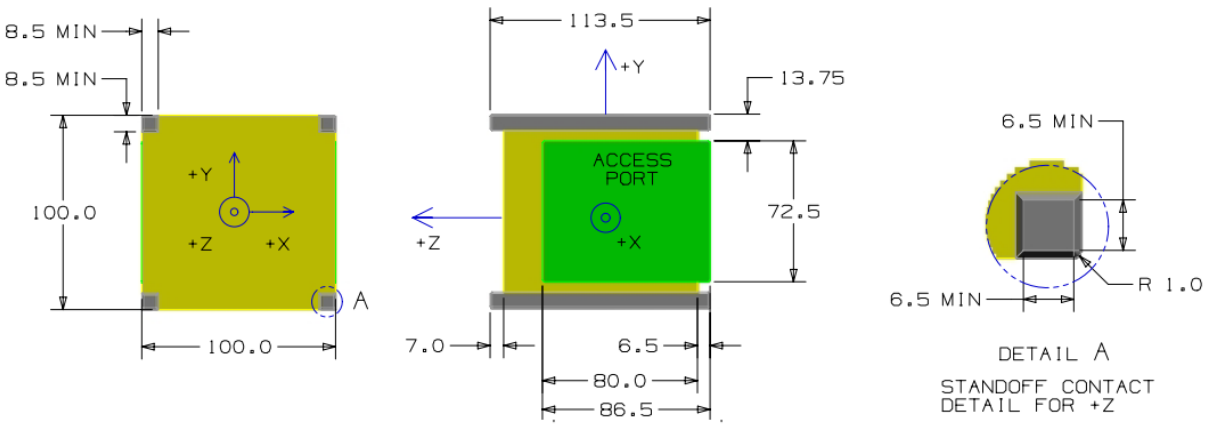

Figure 1.3: 1U CubeSat standard dimensions [7].

Besides the mechanical and electric CubeSat requirements, each deployer and launch vehicle has their own mechanical test requirements. They serve to prove that the S/C is not a danger to other CubeSats in the deployer or to the primary payload of the launch vehicle. At a minimum, random vibration, shock tests, thermal vacuum cycles, bake out and visual inspection shall be performed [7]. More details about each test will be discussed in Chapter 5.

Mission success depends on the deployment mechanisms reliability, that typically are used for solar panels and antennas [28]. The first is used to increase the available power on the S/C, by increasing its solar panel area. The second is used to increase antennas throughput, by increasing antenna size and directivity. Deployment mechanisms vary. While solar panels typically use self locking mechanisms, with springs locked in place by a wire that burns on command, antenna deployment can use more advanced mechanisms. Inflating the material using a gas or heating it with temperature-dependent memory effect materials are some examples.

1.4.8 Thermal Control

Thermal control is important for S/C as their external temperature can vary by hundreds of degrees when are/aren't in line-of-sight with the Sun. Each subsystem has their own operational and non operational temperature range. While going outside of the fist range will probably make that component or subsystem to not function properly, going outside of the second range could provoke component, subsystem or even mission failure.

CubeSat developers generally resort to thermal simulations with the expected space conditions of the considered orbit and attitude control. The orbit dictates how much power the S/C receives from the Sun and its orbit altitude lays down how much power the S/C receives from radiation originated at Earth. Attitude control is also important because S/C rotational speed will imply a more/less temperature difference between the hottest and coldest face of the S/C. Some problems of thermal simulations are the lack of data from manufacturers, S/C power consumption and dissipation and software limitations on non-static simulations [29].

The internal S/C temperature control is classified as passive or active. Passive technologies do not use energy to control temperature. Some examples of such technologies are radiators, coatings, fixed-conductance heat pipes and Multi Layer Insulation (MLI). On the other hand, active technologies use heaters, louvers and variable-conductance heat pipes [13]. For small S/C, thermal control is limited by size, weight, cost and reliability. CubeSats generally resort to passive technologies such as MLI and coatings to achieve thermal balance on the S/C . MLI provides diminished heat dissipation while blocking incoming solar flux. Coatings are used according to the thermal simulation. If the S/C is colder than wanted, black coating is used due to its high absorption/emittance ratio. Otherwise, white paint is used. The most adopted active technologies are heaters. They are used during cold cycles of the orbit to keep the battery temperature inside of its operational range. Biology missions on CubeSats also use heaters to keep their payload within a precise temperature range [30].

1.4.9 Ground Segment and Operations

The Ground Segment consists of a network of Ground Stations and control centers such as spacecraft Operations Control Center (SOCC), the Payload Operations Control Center (POCC) and the Mission Control Center (MCC). While for conventional S/C, these control centers may be distanced in distance and function, small S/C Ground Stations typically have undifferentiated control centers. The GS has the purpose of mission support and payload data relay. S/C support is done by commanding and controlling their operation, monitor their health and attitude and track their position [30].

Ground stations use antennas to receive and transmit data back to the S/C. Low frequencies (S-band or lower) do not need tracking/pointing antennas, while higher frequency do need. Signals from a S/C firstly arrive at the antenna. Then, the signal goes into a low noise amplifier. This should be kept as cold as possible to not induce noise on the signal. Then it is down converted, the carrier is found, data is demodulated and processed. In the meanwhile, Doppler ranging is used to change the emitting frequency. This is necessary because the relative speed S/C to the GS varies according to the orbit, communication window and with each passage. To command the S/C, commands are modulated (with Doppler considered), up converted, amplified and then are transmitted from the antenna.

As in the space segment, the ground segment of a CubeSat developer typically uses COTS products. A single modified room with COTS communication hardware and software and a fixed or mobile COTS antenna is enough for the majority of missions. An exception is a mission called PhoneSat. They did not have any form of creating energy and used their on-board stored energy. With only five days of power, data transfers with one GS would not be enough. They reached the amateur radio people that helped set up a 1343 node distributed ground data system. The market also has solutions for CubeSat developers that cannot have a GS or want to focus on the S/C development. Companies such has ASAT, Clyde space, ISISpace and Surrey Satellite Technology have working ground stations spread out across the world. They function as distributed networks and provide commands up-link and telemetry down-link from a cloud-based server. Their frequency coverage varies from VHF to X-band, and the developer should choose the best match [30].

Some difficulties on the implementation of this system come mostly from the down-link frequency and orbit. Amateur frequencies are relatively low and have reduced broadband, which makes down-link slow. Also, these frequencies for down-link cannot be encrypted so technically, everyone can listen in. The orbit is generally low altitude, which implies short communication windows. Also, partial or full operational autonomy may prove essential to future multi-CubeSat missions. With over ten companies planning to launch at least 30 CubeSats each before 2020, manage all of those S/C individually would need too many man hours [5].

1.4.10 Launch Vehicles

Launch Vehicles (LV) send S/C into space and place them in the pre-determined orbit. Typically, the LV capacity exceeds the needed for the primary payload. Companies are buying that remaining mass, volume and other security margins and integrating their deployers alongside the primary payload. This

approach is called classical ride-sharing. Nowadays, this approach is slowing down and giving space for dedicated ride-sharing. In this approach, an integrator buys a complete launch, and sells the capacity to multiple S/C without a primary payload. Typical ride-sharing integrators provide services such as system testing, engineering support, deployer hardware, spacecraft-to-deployer and deployer-to-LV integration. Some companies doing this are ALS, ISISpace, Nanoracks and SSTL [30].

Another LV approach uses dedicated small S/C launchers. Some proven and successful examples are Minotaur-1, Pegasus, Spark and SS-520, with some other launchers being developed such as Vector-R and Arion-2 [31]. A distinct approach is to transport the small S/C in a resupply mission to the ISS, as a secondary payload. There, the deployers are put on the external arm of the station and then deployed. There is also the hypothesis of hand-deployment, when ISS astronauts perform extra-vehicular activities [30].

The leading ten LV by the number of CubeSats launched can be seen in Table 1.2. It comprises data of successful launches up to June 2018. Data only regards CubeSats with 1U to 6U dimensions, leaving others outside of its scope. There is a company that corresponds to one third of all CubeSats launched, called Planet Labs, and they used most of the launchers in the table. For example, with only one launch of PSLV-XL, a total of 105 small S/C went into space, 88 of then from that company. A truly remarkable feat, that would be easier if they used a dedicated, smaller launch vehicle. Such LV would increase mission time flexibility for the small S/C, providing a more relaxed testing program.

Table 1.2: Leading LV by CubeSats launched, up to June 2018 [32].

Launch Vehicle	**Number of CubeSats Launched**
PSLV-XL	173
Atlas-5(401)	107
Soyuz-2-1a	71
Antares-120	66
Falcon-9	41
Dnepr-1	40
Minotaur-1	39
Antares	34
Dnepr	26
Antares-230	20

1.5 Space Debris Mitigation

Space debris is defined as all man-made objects, including fragments and elements thereof, in Earth orbit or re-entering the atmosphere, that are non-functional (United Nations definition) [33]. They have become an unintended side-effect of space exploration and exploitation. Ensuing years without regard for mitigation measures, from launch vehicle orbital stages and accidental or purposeful break-ups, the space debris population has been increasing. Furthermore, it is involved in collision events, causing fragmentation debris that pose a considerable risk for operational space systems. According to ESA DISCOS (Database and Information System Characterizing Objects in space), 240 break-up events

were recorded up to May 2014. Of those, 30,8% were due to the propulsion system; 3,3% to battery; 4,6% to collisions; 25,4% to deliberate break-ups and the remaining 35.9% to unknown sources. Most break-up events come from components storing energy (e.g. batteries, propellant tanks, high-pressure vessels, momentum wheels) or from intentional break-ups [34].

In the past there was a consensus that intentional break-ups were the solution for the re-entry of large spacecraft. That has been disproved because they create conditions for collision events. Although not that common from data up to 2014, collision events have serious consequences for the debris population increase. One of the most severe accidental collision events took place on February 2009, between an operational and a non-operational communication satellite of 560 kg and 950 kg, respectively. The U.S. Space Surveillance Network (SSN) catalogued over 1600 fragments with over 50% still in orbit [35, 36]. The NASA Breakup Model estimated this collision to create 1420 fragments longer than 10 cm, $73\,320$ longer than 1 cm and 3.76 million longer than 1 mm [37]. Note that the SSN can only track accurately fragments longer than 10 cm and with some accuracy longer than 5 cm in LEO. Since the average LEO relative speed is in the order of 10 km/s, the kinetic energy of a 5 cm, 176.7 g aluminium sphere is 8.84×10^6 J, the energy equivalent of being hit by a bus [38]. This means that, being the NASA Model correct, there are thousands of untraceable objects capable of inputting major damage to operational spacecraft.

Figure 1.4 shows all objects catalogued by SSN where fragmentation debris include objects from break-up and anomalous events while mission-related debris include objects released purposefully. Figure 1.4 also shows that the amount of debris in orbit have been increasing at a relatively constant pace until the 1990's. This growth rate decreased in this decade due to the voluntary implementation of debris-mitigation guidelines. Then, in 2007 there is a major and intentional collision event, releasing over 3400 catalogued objects, turning back that trend. Additionally, Figure 1.4 shows an apparent trend for the population growth to stabilize in the most recent years. However, a study regarding LEO satellite populations stated that, even if all launches into space would be stopped, debris would increase in number due to collision events, for at least 200 years [39].

There is another problem regarding space debris, their re-entry. It may be a risk for the human population and ground, sea and air traffic and resources. While small debris burn-up completely re-entering in the atmosphere, larger ones with around 2,000 kg have 10-40% of their mass reaching the ground [35]. Along with the fact that in average, one of those large debris re-entry occur every week, this problem seems to be of great concern. In fact, the human population has not suffered from this problem because 70% of the Earth's surface is water and the population is concentrated in cities or dispersed by villages. This leaves the probability of a direct hit relatively small. Despite the fact, there is one recorded person being hit by a small debris, which provoked no injuries.

Space debris mitigation measures are essential to ensure a safe future for the spacecraft orbiting the Earth and the Humans that choose to explore it.

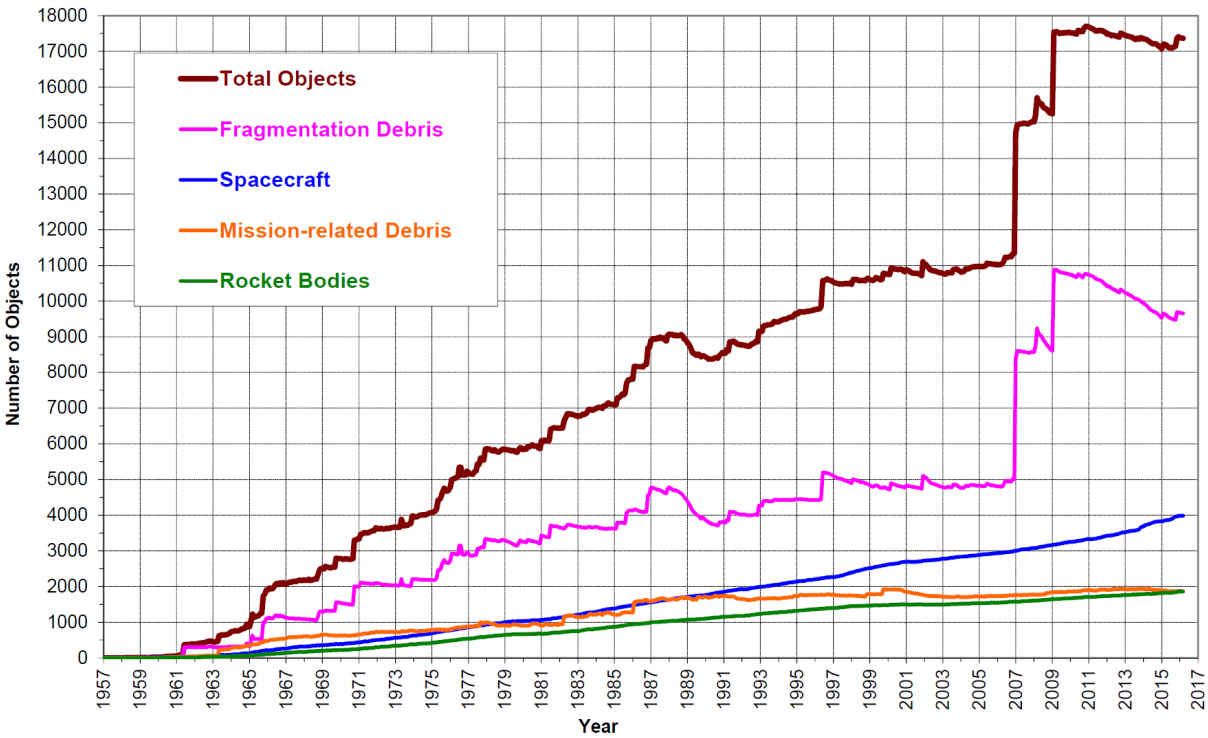

Figure 1.4: Number of objects orbiting Earth by object type and catalogued by SSN [36].

1.6 Assembly, Integration and Verification Plan

The assembly, integration and verification plan of all S/C shall be properly thought through to improve the success rate of the mission. This is specially important for inexperienced CubeSat designers. From Figure 1.5, which contains data up to July 2018, the success rate of the first CubeSat designed per organization is only 38%. Only considering Universities, the rate falls to 35%. The ISTsat-1 is the first CubeSat designed by our University so the odds are not in our favour.

With the help and experience from ESA, the team will try to beat that odds, by providing a well thought and structured assembly, integration and verification plan. This plan will take in account a logic chronological order, repeatability and logging of tests and their analysis.

From Figure 1.6, one can see that, from the 454 CubeSats considered from 2000 until the present, only 17% were a success. Also, 9% failed launch, a failure not dependent on the S/C designer. Around 39% did not perform the planned mission or it ended before the mission goals were reached. Such high failure rates makes us appreciate the importance of good AIV planning and executing, as an essential tool for a good mission return.

Past mission design mistakes also makes us learn. According to 23 independent interviews held in 2017, with academia, industry and government agencies, totalling 94 small satellites launched, 27 mission anomalies were found [40]. The majority of them could have been avoided with more ground testing (39%) or the design was flawed (42%). From the interviews, several problems involved communication failures with the CubeSat, COTS products not working as specified in their data-sheets and deployables failing to deploy. The interviews yielded some interesting recommendations, very similar to the ones that

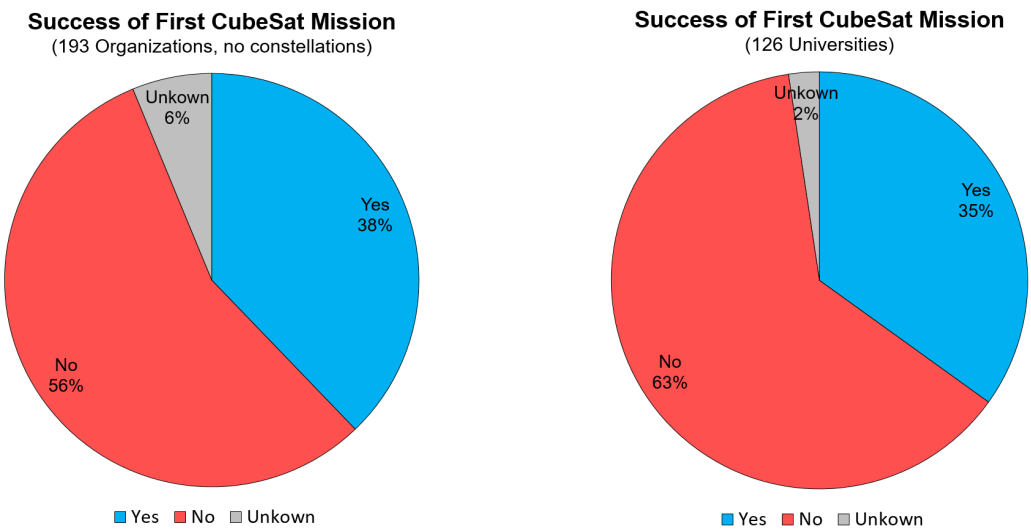

Figure 1.5: Success of first CubeSat Mission, for all organizations (left), and only Universities (right) [32].

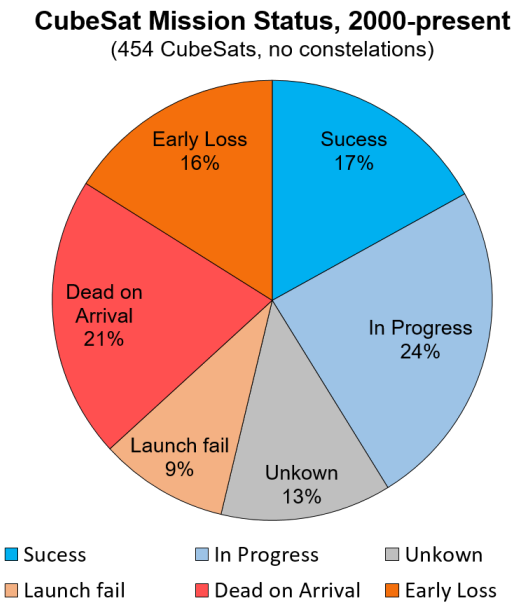

Figure 1.6: CubeSat Mission status from 2000 to the present, excluding constellations [32].

ESA has outputted to the ISTsat-1 team. Such suggestions are to plan extensively the integration and testing phase, conduct a risk-based mission assurance, design the S/C for robustness, easy assembly and disassembly, stock spare components and perform tests at ambient and environment conditions, both functionally and mechanically.

Chapter 2

Verification of Nanosatellites

The space environment makes spacecraft susceptible to functional and mechanical failures, so verification plans shall be considered. They provide confidence that the design fulfils all mission requirements and survives the expected environment, both in the launch and operational phases. This chapter provides an overview of said verification plan, with special consideration of ESA methods and standards.

One of those plans mitigates the creation of space debris. These measures are essential to ensure a safe future for the spacecraft orbiting the Earth and the Humans that choose to explore it. Mitigation measures include moving the spacecraft away from space debris, de-orbiting it at the end of their mission, parking it on ”graveyard” orbits, reducing the release of mission-related objects and actively removing space debris.

Another verification plan is the assembly, integration and verifications phase. It is the blueprint for verification at component, subsystem and system level, both functionally and mechanically, and at ambient and environmental conditions. This means that each component will be firstly tested separately. Then, it can be assembled into subsystems or continue as a stand-alone component. Later, each part (component/subsystem) is connected to another part, and integration tests are performed. These tests verify if the parts behave as expected.

Up to this phase, the majority of the verifications are functional. Depending on the space heritage of each component/subsystem and the risk that the developer is willing to take, some environmental tests may be performed. Environmental tests include mechanical and thermal tests. The mechanical tests prove that the spacecraft survives the launch and the thermal tests prove that the spacecraft survives the space environment.

Depending on the risk assessment from the developer, he can now assemble one of three models: a prototype, a representation of the final spacecraft or the actual spacecraft that will be flown. When the subsystems for each model are assembled and integration tested, the system is assembled. Then, it is subject to integration tests, to a full functionality assessment, to environmental tests and another functional assessment. Finally, the system receives the ticket to orbit or another model is manufactured and tested, depending on the model being verified and the outcome of the verification phase.

2.1 Space Debris Mitigation

Space debris mitigation procedures decrease the risk of creating new debris while in orbit. Guidelines from NASA, ESA, the UN and the Inter-Agency space Debris Committee (IADC) are used in each space project. They provide mandatory requirements that the S/C developers and launch providers have to follow. Components such as clamps, protective covers, spring release mechanisms, explosive bolts, pyrotechnic devices and propellant tanks shall be kept to a minimum and, when they must be released, devices that trap them shall be used. Solid rocket motors that release burn products larger than one millimetre in diameter are not allowed. Collision avoidance manoeuvres shall be performed when there is a credible collision risk. In fact, the ISS has performed more than 16 of these manoeuvres. Spacecraft and orbital stages orbiting LEO shall be disposed at the end of their mission to a low enough orbit that guarantees that it does not orbit the Earth for more 25 years. They can also be parked in a ”graveyard” orbit. After the disposal, all sources of energy are used up to prevent post-mission explosions. In case of re-entry, a risk analysis for the human population on the ground is performed. If there is a high risk, the spacecraft of launcher mission or design is changed [41].

Although there are guidelines from various space agencies, only ESA's will be refereed, because they were followed by the ISTsat-1 CubeSat. ESA made two tools to help space projects to analyse most of the mitigation requirements it created: MASTER (Meteoroid and space Debris Terrestrial Environment Reference) and DRAMA (Debris Risk Assessment and Mitigation Analysis).

MASTER characterizes the natural and man-made particles orbiting the Earth and the risk assessment on user defined target orbits. The major inputs for the simulations come from the space Surveillance Network (SSN), which operates ground and space based radars and telescopes for observation purposes, from ESA's Database and Information System Characterising Objects in space (DISCOS), which serves as one single source of information that describes all space missions, and from Two Line Elements (TLE), which are used to characterize an orbit at a specific time, possibiliting accurate orbit predictions.

It is a realistic description of a reference population, derived from the simulation of all major space debris sources. For each source, there is a computer model generated in terms of mass/diameter and orbit change with time. The population model is used to propagate all debris sources from May 1, 2009. After this date, three scenarios are considered to simulate the future space debris environment. These scenarios are business-as-usual, intermediate mitigation and full mitigation. With the random prediction of future events, the simulations are performed a number of times, with each having different random conditions, that is, the Monte Carlo method. To validate the simulations against real life conditions, inputs from previous debris creation events are added to the model, increasing it's accuracy. Up to this moment, these simulations are composed of objects larger than one micrometer in diameter.

DRAMA is used in conjunction with MASTER and has five software tools incorporated. The first is DRAMA-ARES (Assessment of Risk Event Statistics). It assesses the collision probability between and operational spacecraft and objects orbiting the Earth, the mean number of avoidance manoeuvres necessary to avoid crash events and the fuel consumption associated with the manoeuvres. The majority

of CubeSats do not have a propulsion system so, the tool for this class of spacecraft, is only used to assess the collision probability.

The second is MIDAS (MASTER (-based) Impact Flux and Damage Assessment Software). It provides debris and meteoroid collision flux for a target orbit, period and particle size range, down to one micrometer in diameter. It can simulate different debris population evolution scenarios as business-as-usual and intermediate and full mitigation, with different S/C structures and orientations (e.g. Earth or Sun oriented). It provides outputs such as the probability of collision versus time, diameter and mass, both for the orbit and period of time considered.

The third is OSCAR (Orbital spacecraft Active Removal). This tool has the purpose of addressing disposal manoeuvres of each S/C at their end-of-life. It computes the orbital lifetime of a S/C without the use of propellant, taking in account forecast solar and geomagnetic activity. It allows investigating the necessary propellant to re-orbit or de-orbit and the use of drag augmentation systems. For CubeSats, this tool is typically used to check if it does not stay in orbit for more than 25 years, since active removal is not typically used.

The fourth is CROC (Cross Section of Complex Bodies). It computes cross sectional areas of body-reference fixed, rotating or randomly tumbling S/Cs. It is mostly used as input for the other tools.

The fifth is SARA (Re-entry Survival and Risk Analysis). It helps S/C designers to analyse risks regarding controlled and un-controlled re-entries, due to surviving objects on re-entry. The re-entry trajectory is computed with an aerodynamic and thermal analysis to predict the debris path on the ground. With that data, it also computes the casualty probability, that is, the probability of the debris hitting someone.

2.2 Assembly, Integration and Verification plan

The main activities in the assembly, integration and verification require a proper order and management. It is essential to verify design, security, reliability and performance requirements from the developers, launcher and operators. The plan generally goes from component, to subsystem and to system level. Verification starts at ambient conditions, where most functional verification take place. Then, the S/C is tested at environmental conditions, that is, at the expected launch and space environment.

A good verification method is generated by answering three questions: ”what?”, ”how?” and ”when?” [42]. The first question describes what are the requirements and products that need to be checked. A initial set of requirements, that are traceable, unique, single and unambiguous is necessary to successfully predict the outcome of the verification process and pass/fail criteria. How will the verification take place is questioned next. This is an iterative process that changes according to the product, duration of procurement, design, manufacturing and integration, model philosophy, mission phase, time for planning and verification tools procurement, facilities, and others. The third question specify the proper order of verification and adaptation the timeline to the chosen model philosophy [42].

The document that plans all verification and testing is called the AIV (Assembly, Integration and Verification) and the AIT (Assembly, Integration and Test). Used in the most prominent space agencies,

each of them with their specific standard. From now on, this thesis will use the acronym AIV for the test and verification plan. It will also follow ECSS standards for verification [43] and testing [44].

2.2.1 Quality Assurance on CubeSats

Testing is important for every engineering project, but specially for S/C due to their operational environment that limits repairs when there is an on-orbit failure. It is also important for CubeSats because, even though they are cheaper, simpler and take less time to develop than traditional S/C, the willing to minimize risks shall be present at all times.

Quality Assurance for space missions is focused on providing confidence that a product or process fulfils its requirements. On the other hand, Product Assurance studies, plans and implements activities to assure that the design, controls, methods and techniques in a project results in a product with a satisfactory degree of quality [45]. All ESA, and the majority of European S/C missions, use the ECSS (European Cooperation for Space Standardization) for quality assurance. It provides a general view for equipment calibration, handling, storage, preservation, design traceability and verification, equipment procurement, S/C manufacturing, assembly and integration, S/C test facilities and Ground Support Equipment (GSE) [46].

Since most ECSS standards are made in accordance with conventional S/C design, the use of such standards in the CubeSat community is not directly applicable. Also, tests to check all of these requirement require planning, executing and analysing the outcome data. The overall process is considerably time and resource consuming, which makes the CubeSat designers to focus their attention in the deployer requirements. These are mostly mechanical and environmental requirements that verify if the CubeSat is not a danger to the primary payload, the launch vehicle or other CubeSats by breaking or releasing debris.

The FYS program provides their student projects with a list of requirements, according to the meet-or-exceed principle, which are compiled is a document named FDS-VCD (FYS Design Specification - Verification Control Document). Such requirements come from the CubeSat Design Specification [7], the NanoRacks CubeSat Deployer Interface Control Document [8] and Safety Data Template [47], the JAXA JEM Payload Accommodation Handbook [48] and FYS program-specific requirements. Following this list of general requirements is not enough to accommodate for all different CubeSats specific mission and design. Another list shall be redacted by the CubeSat developers with the components, subsystems and overall system functionality requirements to accomplish the mission goals. The list is compiled in the TS-VCD (Technical Requirements Specification – Verification Control Document).

Both FDS-VCD and TS-VCD requirements have a verification method such as inspection, analysis, review or test. They are also identified by their respective levels such as component, subsystem, system, and others. Different S/C mission life-cycle phases may mean that a different verification method shall take place. When both FDS-VCD and TS-VCD have their requirements closed-out, the verification is complete and there is a quality assurance of the system.

2.2.2 Model Philosophy

When planing a space mission, the first thing to do is to define the the model philosophy. It specifies the characteristics of physical models required to achieve confidence in terms of quality, with cost, risk and time weighing [42]. One S/C can go through multiple models during its development, and they are chosen in case-by-case analysis, according to cost, acceptable risk and available time. There are five models: development, engineering, qualification, proto-flight and flight models.

Development models are mock-ups or prototypes. They apply to components or subsystems and are used for design support of the overall architecture, interface controls, operational procedures evaluation and layout optimization. They are mostly used for functional testing, but can also be subject to environmental testing

The Engineering Model (EM) and Engineering Qualification Model (EQM) are flight representatives of the S/C. They are used for functional qualification and final validation of the GSE (Ground Support Equipment), facilities and test procedures. While the EM does not have high reliability and redundant parts, the EQM can have redundant parts. In the ambient campaign, the EQM is also used for EMC (Electromagnetic Compatibility) tests and, some of its components can be used during the environmental campaign.

The Qualification Model (QM) fully reflects the S/C end design. It is used for functional and environmental tests, for equipment newly designed. Its test levels and durations are specified in [44], and no components from this model shall be used for flight.

The Proto-Flight Model (PFM) fully reflects the S/C end design. It will undergo functional and environmental tests, in proto-flight or acceptance test levels and durations, according to [44]. If such tests are successful, the flight model receives the ticket to space.

The Flight Model (FM) is similar to the PFM, with the exception that there was a QM that passed all tests before the FM was manufactured. This means that the FM will only go through functional and environmental tests, in acceptance levels and durations.

2.2.3 Verification Methods

Each model can be verified by different methods: inspection, analysis, review of design or test. All four are used in the S/C qualification and, during the acceptance and pre-launch phases, only testing and inspection are performed. While in orbit, inspection is only possible for manned missions, analysis for link or power budgets, review of design for S/C or GS software changes and testing is available through commanded or S/C self-diagnostics [42].

Inspection consists on visual determination of physical characteristics such as hardware accordance to drawings and requirements imposed by the team designer or outside sources. Physical deformities can occur due to handling, storage or transport and, after such activities, a inspection shall be performed.

Analysis are theoretical or empirical events, that provide evidence of a good design. It is done by computer modulation and simulation or by comparing with other qualified and similar components. Verification by similarity is only applicable to COTS products without modifications and previously qualified

with at least the actual project environmental requirements [42].

Review of design uses evidence or records that explicitly state if a requirement was met. They use design documents and reports from present and previous verification stages, and engineering drawings with technical descriptions.

Testing has the objective to quantify the S/C performance and functionality, both in ambient and simulated environmental/space conditions. From a matrix of requirements that need to be proved, the testing plan is redacted and executed. It is an iterative process, that is extended as the S/C subsystems are integrated. Critical products are first tested in early verification phases, contingency plans are documented, cost and risk are assessed and GSE is sought [42]. The test documentation shall follow the AIV plan, the Test Specification and Test Procedure (TSTP), the Test Report, the anomalies or failures detected and the raw test data [44].

2.2.4 Verification Stages

The process of S/C verification depends on the chosen model philosophy and verification methods. The S/C goes through several phases such as qualification, acceptance, proto-flight, pre-launch, in-orbit and post-landing [42].

Qualification

Before any S/C can go to space, it first has to be qualified for space conditions. The extent of the qualification program depends on the product heritage [42]. In general, the more space heritage that a component has, the less extensive the qualification has to be. A qualification program is decided on a case by case analysis, with respect to the risk and confidence that the developer has to that specific equipment, and the extent of the COTS modification, if applicable. For example, a software change would force a functionality check but would not imply a redo of the environmental verification campaign.

All testing is done on a dedicated qualification model and, when the verification ends, such model is discarded. All verification methods can be executed in parallel with the purpose of verifying all functional and environmental requirements. Such requirements are verified with a margin, due to the measurement error and the expected space environment. If all requirements are proven, the design is closed. This means that, the S/C that will be acceptance tested, can be manufactured. Environmental qualification test levels with margins and durations for conventional S/C are defined in Table 6-2 of [44]. Some of these tests are random and sinusoidal vibration, shock, thermal cycling in vacuum or ambient pressure and EMC.

Acceptance

Acceptance testing implies that a qualification model successfully underwent tests with qualification levels. Then, an identical model was manufactured, which is now called the FM. It will now undergo functional and environmental tests with acceptance levels, to prove that the S/C is free of workmanship or material flaws. The acceptance tests are typically the same as the qualification, but with less intensity and/or duration. Environmental acceptance test levels with margins and durations for conventional S/C are defined in Table 6-4 of [44].

Proto-Flight

When a combination of qualification and acceptance testing is used, we can say that a Proto-Flight test approach was used. It applies to sub-elements of the S/C, meaning that a subsystem could be environmentally tested individually, and then be integrated into the PFM, by only doing functional testing. With the exception of destructive tests, the elements subject to proto-flight tests are used in the PFM and, if their test results are successful, they receive the ticket to orbit. Proto-Flight testing uses qualification levels with acceptance durations. Environmental proto-flight test levels with margins and durations for conventional S/C are defined in Table 6-6 of [44].

Pre-launch

In the pre-launch stage, the S/C is verified for a proper launch and early operations configuration. Maintenance procedures are also performed during this phase such as visual checks, reduced functional tests, battery level measurements and charging.

In orbit

While in orbit, verification methods assesses the S/C degradation during launch, early orbit phases, and then periodically. Parameters that cannot be fully verified in ambient or simulator conditions are checked, such as the internal temperature of the S/C, the data link throughput, battery degradation. Besides the commanded self diagnostics, the S/C shall also perform such diagnostics periodically by itself and broadcast its results, even if a GS connection was not established. Sometimes, this proves to be the only way of knowing the cause of a mission failure.

Post-landing

The post-landing stage applies to S/C that survived Earth re-entry. Its physical integrity is checked and, if the some or all components are to be re-used, they shall be re-verified. It includes health checks, readiness analysis and performance after modifications and repairs [43].

2.2.5 Verification Levels

Having chosen the models to be used and the respective verification stages, that is, the qualification, acceptance and/or proto-flight stages, verification shall be detailed on the various development levels. These levels shall follow a specific plan and order. Typically, such order goes from equipment level, to subsystem, system and overall system level [42].

Equipment

Equipments can be batteries, sensors, solar panels, and others. Each equipment performs a specific functionality, and their performance can be evaluated against their data-sheet or expected execution.

Subsystem

Then, the subsystem is assembled. A hardware check is performed and then software is implemented into the subsystem. A full functionality check is performed and, depending on the model philosophy, environmental verification might be performed. In the CubeSat community, each subsystem is typically a PCB, that is a bought COTS product, or manufactured by the CubeSat designer. In the latter, the PCB

might be subjected to several processes, such as soldering, coating, and others. The structure might also be anodized or painted. Depending on the applied processes, different verification methods shall be used, which are discussed on a case by case analysis.

Before the S/C is fully assembled, subsystems shall be integrated in an iterative manner. This means that for example, before integrating three subsystems together, the first two shall be working and communicating properly. This provides a more friendly environment to isolate and find errors.

A common way of doing such integration for conventional S/C and CubeSats, is by doing flat-sat tests [1]. In this level, the subsystems are connected together through power and communication buses. With this approach, individual PCB components can be checked against their expected voltage and current, using probes linked to oscilloscopes or voltmeters. Also, the communication bus can be linked to a computer. This allows to catch the exchanged messages between the subsystems and to send commands to the S/C. As the S/C responds, the developers can check its functionality in an efficient manner. If the communications subsystem and its antenna is already in the flat-sat table, the computer can be linked to a radio emitter and receiver, acting as a GS simulator. The specific set-up for the flat-sat level depends on the S/C, but always imply choosing, making or buying the best EGSE (Electrical Ground Support Equipment) for each case.

System level

Verification at system level is applied to the whole S/C, to the ground segment and to the launcher, but only the S/C verification will be referenced in this document. Some of the most prominent steps in such verification are the Full Functional Test (FFT), Reduced Functional Test (RFT), mission test, mechanical, thermal vacuum and EMC tests [44]. The functional tests test if the S/C works according to the requirements and mission, the mechanical tests prove that the S/C survives the launch conditions, the thermal tests prove that the S/C survives the space environment and the EMC tests prove that the S/C works properly without electromagnetic interference from its subsystems and from external sources.

Full Functional Test The FFT is performed to verify the S/C functionalities according to the specified mission requirements, in all operation modes, within the constraints of what can be simulated on ground. Such modes depend on the chosen S/C architecture but, typically, are composed of a normal, safe, back-up and initialization mode. The normal mode implies that no critical error was detected by the S/C, and that the mission can go a planned. Safe mode implies that a critical error happened, such as loss of communication with the GS for a period of time, low battery level, GS command, and others. The S/C goes into back-up mode when a redundant system is used and init mode is when the S/C is turning on. For each operation mode, the way that the S/C behaves is different. This means that the FFT shall be planned in accordance with each mode and follow the expected mission sequence.

The FFT is performed at the beginning and at the end of the test program and, if both outputs are similar within test tolerances, the integrity of the S/C is confirmed. The following functional tests can be checked by the FFT: operational and transient modes, battery charging/discharging, deployment, flash test on solar cells, data rate with different encoding/decoding and transmission power, turn on with low power, data handling and storage, thermal cycling software, ADCS polarization check and calibration, autonomous S/C procedures, and others [44].

Reduced Functional Test The RFT is built from a subset of the FFT. Its purpose is to provide a high degree of confidence of the S/C proper functioning, in a fast and semi-automatic manner. It is used between transports, mechanical or thermal tests and long storage periods.

Mission Test Functional tests are not sufficient to detect all the possible design, manufacturing or workmanship errors or malfunctions because they are requirement oriented. This means that they are a verification of requirements that are written as if in reality the expected values were going to be exactly those expected. In the other hand, mission tests are mission oriented, they have the ability to simulate the mission as close as possible and test what is not foreseen. Mission tests have the purpose to test the space segment for the critical and main operations of the entire mission profile, within the constraints of what can be simulated on ground, with the events occurring in the actual flight sequence.

One of the differences between functional and mission tests is that the first is shorter in duration and will not test for error accumulation. To reduce this risk, the space segment is be kept uninterrupted on according to the chosen test profile, including all modes, transitions and functions. Ideally, the duration of this test is from one to two weeks. At the end of this test, the operational procedure for the mission shall be almost ready [44].

Mechanical Verification These tests are done to simulate and exceed expected launch conditions, within an acceptable margin. This is important for CubeSats to check if it will survive such conditions and to verify if it does not pose a risk for other CubeSats in the same deployer, the launch vehicle and other payloads. For CubeSats, the most prominent mechanical verifications are physical characteristics measurement, resonance search, quasi-static load, sinusoidal vibration, random vibration and shock [44]. All testing involving some kind of vibration testing is typically performed in the same shaker, where all different tests are executed with a specific order, and for all three orthogonal axis. An example of a shaker with the CubeSat set-up can be seen on Figure 2.1.

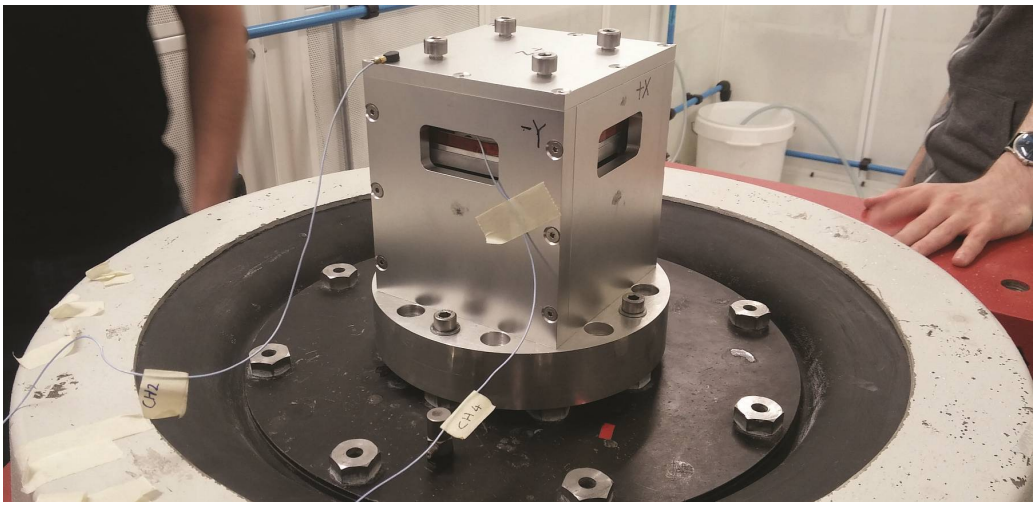

Figure 2.1: Example of a CubeSat mechanical vibration test set-up [1].

Physical characteristics include mass, centre of mass and moment of inertia measurements. Each one unit (1U) of a CubeSat shall weigh no more than 1.33 Kg. Its centre of mass and moment of inertia

[1] http://uosdesign.org/designshow2017/group-design-project/uos3-cubesat - August 15, 2018

requirements depend on the attitude control, deployer and the costumer.

Resonance searches are sinusoidal frequency sweeps of a low amplitude level. They characterize the major resonance modes, before and after a higher level run. It detects workmanship flaws when there is a considerable discrepancy between both resonance searches, resulting in a mechanical testing failure [44].

The quasi-static load test objective is to verify that the S/C has enough strength to survive the maximum expected loads during launch. The most typical technique for CubeSats is to perform a sine burst, by inputting a sinusoidal vibration on the S/C with a gradual increase in amplitude, then maintaining, and finally decreasing it to zero, all with a constant frequency. The maximum amplitude in the sine burst is the maximum of the lateral and longitudinal loads, plus a security factor depending on the verification stage. The chosen frequency is significantly lower than the fundamental vibration frequency (first mode of the resonance search), to minimize an amplified acceleration. The sine burst is performed in a short amount of time to avoid unnecessary fatigue damage, with a typical duration one second. Such testing shall be performed one axis at a time, in all three axis [49].

Sinusoidal vibration result from natural oscillations of the liquid propellant of a LV burning and producing thrust. The typical test involves using a logarithmic frequency sweep, with a constant acceleration defined for each LV. A control feedback loop is used maintain the specified acceleration, by increasing or decreasing the sine amplitude, as the frequency is swept. If the test requires low frequencies, acceleration may be lowered due to a shaker limitation. These tests shall be executed in the three orthogonal directions. By comparison with the resonance search, a discrepancy of more than 5% in frequency and more than 20% in amplitude means that the test element will not pass this test [44, 50].

Random vibration tests are mostly applied on small satellites, replacing acoustic tests of conventional S/C. Due to its size, CubeSats are more subject to random than acoustic vibrations. The LV, and subsequently the S/C, endures these vibrations during the launch, due to turbulent flows and the rocket engines. Such vibrations are unpredictable and non-periodic, both in frequency and amplitude. Despite this fact, there is some degree of statistical regularity. With that data, probability of occurrence of some accelerations and magnitudes are calculated, providing good test parameters. These parameters are typically computed by the launch provider and given to the S/C designers, so that they can model the S/C accordingly and perform these tests. The shaker provides a vibration according to the random vibration test profile of the LV, while another component changes its amplitude in a randomized way, within the expected amplitudes, and with a margin accordingly to the verification stage. As in the sine vibration, accelerometers monitor the shaker vibration and a feedback loop makes sure that the vibration is within expected values. By comparison with the resonance search, a discrepancy of more than 5% in frequency and more than 20% in amplitude means that the test element will not pass this test [44, 50].

Shock tests simulate the shock envelope to which the S/C will be subjected during launch. Equipments operating during expected shock phases shall be operated and its behaviour recorded. All equipments shall be checked for mechanical failure. A typical test involves the use of a pyrotechnic impact device, one orthogonal direction at a time [1].

Thermal Verification On CubeSats, mechanical verifications are typically used to make sure that the S/C survives the launch, and is not a danger to any other payload or even to the LV. On the other hand, thermal verifications try to prove that the S/C will survive space conditions. Bake-out and thermal cycling are the most typical thermal verfications that are performed on a space mission.

Bake-out is a process where a component will endure high temperatures for a considerable high amount of time. Its major purpose is to accelerate the out-gassing rate of the S/C, and can be performed both in vacuum or at ambient pressure. Out-gassing is necessary when subsystems have chemicals or other materials that store small amount of gas inside. Typically it is fist performed on subsystem level, because the material out-gassing properties may be unknown and to reduce contamination of the heating chamber with possibly dangerous chemicals. Also, according to the CubeSat standard, there is a limit to the S/C total mass loss and collected in the chamber. By performing a subsystem level bake-out, this mass loss will be lower [7, 45].

While thermal tests can be performed at ambient or vacuum pressures, the latter is more used for CubeSat testing as it provides a more accurate simulation of space conditions. The S/C is turned on during the testing and an umbilical cable shall be connected from it to a computer for data recording in real time. Such cable is bidirectional, meaning that communication is possible with the S/C. This makes possible to operate the S/C, including performing self-diagnostics, changing between operational modes, requesting parameters, and others. Some temperature sensors known as thermocouples are used in strategic components of the S/C, such as the structure and battery. These sensors are placed inside of the S/C during its final assembly and integration.

The S/C can be suspended by wires coming from the top of the TVC chamber, or be simply put on the floor of the chamber, depending on the chamber configuration. An example of the first approach can be seen in Figure 2.2. A RFT is performed when the S/C is inside of the TVC chamber to guarantee that it is performing properly before the thermal cycles. A RFT is also performed after the TVC test, when the S/C is at ambient temperature and pressure. This test is performed after mechanical tests, as in the real mission. The most intense mechanical stresses will be during launch, while thermal stresses will be most accentuated during operations in space [44].

Electromagnetic Compatibility EMC tests are performed in a anechoic chamber, which completely absorbs electromagnetic waves. They are mostly used for auto-compatibility tests, meaning that they test if a subsystem or component affects others by emitting electromagnetic waves. Such waves can be created by simply having a current going over a wire. Due to compact approach of CubeSats, such danger cannot be ignored. Due to the isolation from other radio waves, the radio frequency link can be measured in free space conditions [44].

Overall System

Verification at system level is applied to the whole S/C, to the Ground Segment (GS) and to the launcher. When these systems are assembled or have to work together, verifications shall take place to ensure that they actually do. Some examples of such verifications in the CubeSat community are the communication link between the S/C and the GS and the fit test of the S/C with the deployer.

[2] http://www.esa.int/spaceinimages/Images/2015/09/OUFTI-1_in_Thermal_Vacuum_Chamber - August 28, 2018

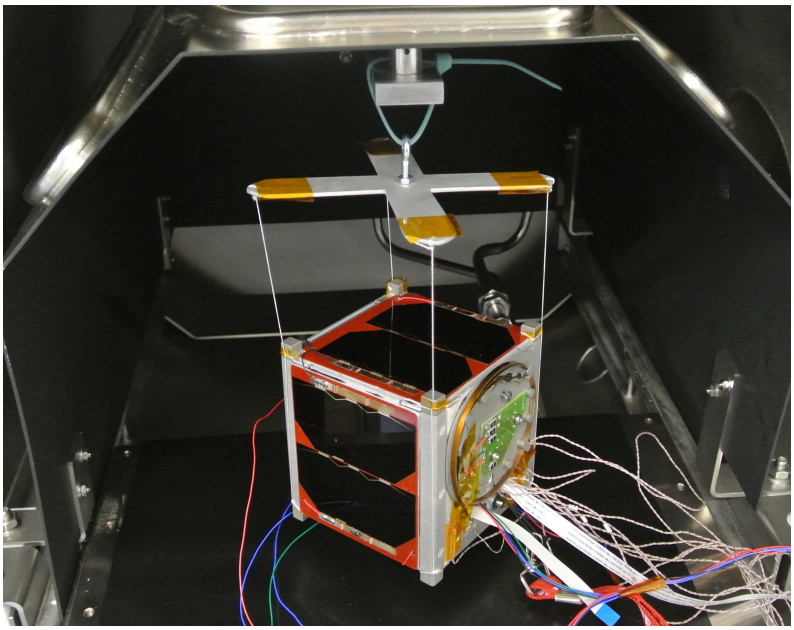

Figure 2.2: Example of a CubeSat TVC test set-up at ESA [2].

End-to-end tests assess the bidirectional communication between the S/C and the GS, as closely as possible to the real mission. It is typically performed in an anechoic chamber, and the radio frequency transmission, uplink/downlink are tested. Also, this has the objective of qualifying the GS, by testing all of its operating procedures in detail.

For the S/C to go into space, it has to fit inside of the deployer considerably easy, otherwise the springs on the deployer would not be able to deploy the S/C. Before this test, a measurement of all the S/C external dimensions will take place, but there is no better test than inserting the S/C into a real deployer.

2.2.6 Non conformance

Through the CubeSat development, student teams in the FYS program send data packages and receive RIDs (Review Item Discrepancy). Data packages are carried through the project life-cycle and provide an assessment of a project status against its targets and requirements. Received RIDs contain issues, questions and solutions arising from the review of a data package. The clarifying feedback from ESA experts prove essential to solve such issues.

In a S/C design and build, anomalies and unexpected behaviors can happen and are logged in a NCR (Non-Conformance Report). It is a summary of the identification, root cause analysis and solution. Immediately upon the detection of a non-conformance, action shall be taken to avoid any damaging effect due to continued use or reuse of the non-conforming item. This could be done by interrupting a verification campaign until the root cause has been identified. The situation in which the non-conformance occurs should be described in detail, including events observed just before and after the occurrence. Such description will help the team during the root cause analysis.

NCR can be solved as in Figure 2.3. If no changes are implemented, a RFW (Request For Waiver)

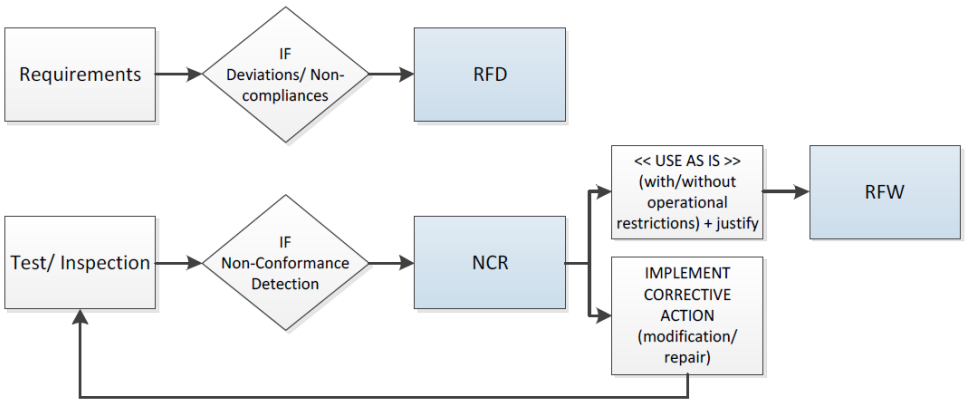

Figure 2.3: RFD, NCR and RFW in the FYS program [51].

is sent for approval. If a corrective action is implemented, a new test or inspection is performed. If a deviation from a requirement is identified, a RFD (Request For Deviation) is redacted. Both the RFD and RFW explain the difference of the expected and obtained result and prove that, such change, will not provoke an abnormal risk for the mission, deployer, launcher or other systems.

2.3 Assembly and Integration Plan

Verification and Integration come together in the final phase of the S/C assembly. Integration is the process where components are assembled into a subsystem, or subsystems and instruments into a system, and the verification of the proper functioning of the individual parts when they are interconnected. It is a critical part of the S/C lifetime because an assembly misstep can cause a propagation of errors, leading to a mission failure. The integration and verification team are an important part of the system design, and they help to ensure a good mechanical, electrical and thermal union [13].

Before the assembly of the whole S/C, each subsystem shall be assembled and go through verifications to detect design or fabrication flaws. Subsystems shall be positioned on the S/C in way to reduce it's volume, harness length and to avoid mechanical interferences. In addition, preparing for the verification forces the design to be re-analysed and documented, highlighting potential problems.

The order of integration must be considered and planned accordingly [13]. For example, if a conventional S/C has a propulsion system, it is the first subsystem installed and testing is only possible after all electronics are integrated. It is typically necessary to install the power subsystem first, and then command and data-handling, RF, ADCS and finally, the payloads. For CubeSats, the typical approach is to firstly assemble the inner and then the outer subsystems. This gives the operators a greater accessibility for assembly and verification procedures. When assembling the S/C, all parts shall be handled in a safe manner. Special care shall be taken to sensitive parts prone to contamination, which shall be kept in a clean environment. The parts include, but are not limited, to solar panels, cameras and sun sensors. All parts must be cleaned before the final assembly. Probes that verify the S/C functionalities shall be used throughout the assembly process. Plugs that cut power to all subsystems and ESD protections shall be taken in account.

After the assembly, a full functionality test shall take place, followed by mechanical and thermal tests. Depending on the system complexity (number of parts), the mission duration, cost and accepted risk, the level of these tests thoroughness shall be taken into account. For conventional S/C, the mission risk is mitigated by adding redundancy to the system, something that is not that common for CubeSat missions due to volume restrictions [52]. The relatively low mission duration time of CubeSats, low quantity of parts and higher acceptance of risks, the AIP plan for CubeSats is typically not detailed as it should be. This leads to a high rate of failure, as seen in Figure 1.6. Nowadays, this drives and gives emphasis to the development of a detailed AIP plan.

Chapter 3

ISTsat-1 Development

To plan the space debris mitigation, AIV and AIP, it is necessary to understand the ISTsat-1 CubeSat design and how it works. A overall view of the CubeSat can be consulted in Figure A.1.

3.1 Operational modes

The operational modes of a spacecraft describe how it works and how it transitions between operations when there is a cause of failure. Understanding how the systems works is the first step to correct any flawed behaviour. The ISTsat-1 has four operational modes: Init, Backup, Safe and Normal mode, that transition according to Figure 3.1.

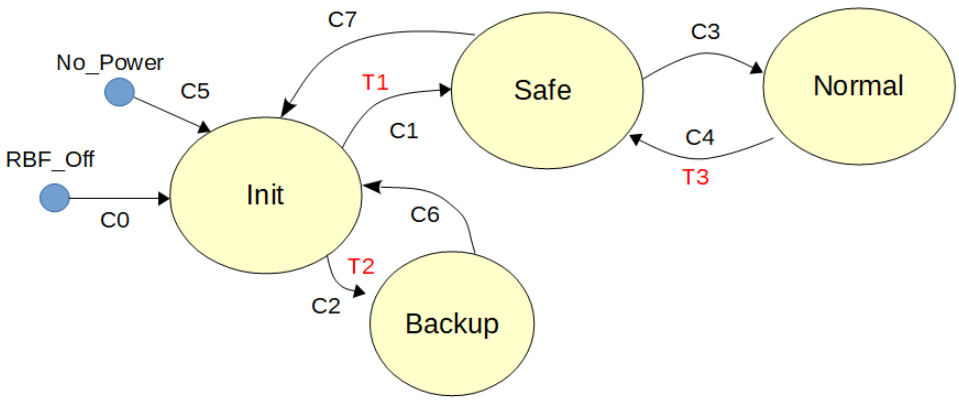

Figure 3.1: ISTsat-1 operational modes [53].

The S/C initializes according to condition C0 or C5. The first is when the RBF pin is removed and the deployment switches are not pressed. The second is when the batteries were depleted and now the S/C can power up. In this mode, the EPS, OBC, TTC and COM subsystems are turned on. The U/V antenna deployment is not activated nor communications with the GS are attempted. When condition C1 and T1 are true, the S/C will automatically go to Safe Mode. Condition C1 is true if the OBC power on was successful and T1 is true if 30 minutes have passed since the S/C started initialization. In this mode, the COM subsystem is powered off, and OBC takes care of communications.

When condition C3 is true, it means that the GS communicated to the S/C and it received a command to go to Normal Mode. In this mode, all subsystems are powered on. If there is a error detected, low power, no command from the GS for a day (T3) or by GS command, the S/C goes into Safe Mode. Now, if condition C7 is true, it means that the S/C has very low power or there was a command from the GS to reboot or reset. The S/C goes into Init Mode.

When the S/C is in Init Mode and T2 and C2 are true, it goes into Backup Mode. T2 is true when 35 minutes have passed since the S/C started initialization and C2 when the OBC cannot power up. In this mode, only the EPS, TTC and COM are working. Solely with a command from the GS that condition C6 can be true. Such command resets the OBC and sends the S/C back into Init Mode.

3.2 Subsystems

The ISTsat-1 CubeSat is composed of several subsystems, which are going to be exposed in this section. More detailed will be given to subsystems that most influence the verification, assembly and integration plans.

3.2.1 On Board Computer (OBC)

The ISTsat-1 OBC is the subsystem responsible for the housekeeping task of the whole S/C. It is in charge of making periodical diagnostics of other subsystems in addition of detecting and reporting failures when they occur. The system has permanent storage capability, using a flash memory, and is responsible for maintaining the S/C time reference. It also gathers telemetry information from all subsystems.

The OBC is designed to be reliable and robust, in order to be able to operate even if the remaining subsystems of the satellite fail. One of the measures is to have a backup power converter connected directly from the solar panels in case of EPS failure. There is a heartbeat signal between the COM and the OBC, which monitor each other. If there is a loss of a heartbeat of the COM, the OBC assumes its communications functionalities. If there is any error in the S/C, the OBC puts it into into Safe Mode. Such errors could be low power, loss of communication with the GS for a day, subsystem error or simply by command from the GS. In case this happens, the OBC subsystem assumes the responsibility of communication with the GS.

This subsystem also comprises ADCS hardware and software, which is necessary to determine and control the S/C attitude. Regarding sensors for attitude determination, there is a component that has a gyroscope, accelerometer and a magnetometer incorporated. It also has a main magnetometer, more accurate that the first component. Five solar sensors give an even more accurate sensing capability, in comparison with the previous sensors. These sensors are incorporated in the solar panels and only work when the S/C is in line of sight of the Sun. With the exception of the -Z S/C face, the remaining five faces have solar panels installed with sun sensors. Three magnetorquer are used to control the S/C attitude. They are incorporated in the -X, +Y and +Z solar panels.

3.2.2 Communications (COM)

The COM subsystem of the ISTsat-1 CubeSat is responsible for handling the communications with the GS when the satellite is in Normal Mode. However, when in Safe Mode, the OBC module is the one that communicates with the GS, allowing the COM module to be idle and saving energy. In the case of the OBC becoming non-operational, the COM subsystem will take over all communications related tasks. This allows communications with the GS to be maintained, thus recovering from a fault in the OBC.

Due to its computational capabilities, the COM subsystem is in charge of aggregating all the payload messages, with the objective of compressing their size for later transmission to Earth, ensuring this way an efficient use of the available bandwidth. The subsystem will also be responsible for saving the data until a transmission opportunity arises. Besides storing mission data, it will also store housekeeping information from other subsystems, providing an interface for any system to log information about their operation. With this logging procedure, the GS is able to enquiry the S/C about any preceded errors, thus giving a chance to understand what might have caused them. This housekeeping data is also stored by the OBC, being a redundant feature.

Due to compatibility requirement issues with the majority of the operating GS and radio-amateur community worldwide, the AX.25 is used as the main data-link layer protocol. Such protocol is processed in the COM subsystem and then sent to the TTC (Telemetry, Tracking and Command). The receiving process of decoding is also performed on the COM subsystem.

3.2.3 Electric Power System (EPS)

The EPS uses a Maximum Power Point Tracking (MPPT) converter for the -X and +X, another for the -Y and +Y and other for the +Z solar panel. The output from the MPPTs goes to the various converters and to a battery charger, that provides the battery pack with the required voltage and current. The EPS also has a redundant feature that, in case the battery charger converter should fail, the converters used to perform MPPT shall be used to charge the battery directly. In this case the solar converters not only perform MPPT but also perform the battery charging profile. The system has a 3.3 V and 5 V converters that regulate the voltage coming from either the solar panels through the MPPTs or simply from the battery.

The battery is a critical element of the S/C and two plans were devised to mitigate it's risk for the mission. Plan A consists on buying rechargeable Lithium-Polymer COTS battery cells and then testing them regarding qualification and flight acceptance. Plan B is to buy an ISS certified EPS, compatible with our S/C. Up to this moment plan A is in place, with a prototype as in Figure 3.2.

In order to extend battery life, the EPS will automatically change the entire S/C operational mode if the battery state of charge is below certain point. Then, the S/C will go to safe mode, saving energy and thus charging the batteries. If the power decreases even more, the EPS will shut down the S/C until the solar panels recharges the batteries. To provide a good operational temperature range for the battery, heaters controlled by the EPS will turn on when the battery temperature goes under 0 ^{o}C and turn off when it goes over 5 ^{o}C. The battery pack has a 2S2P configuration with charging balance circuitry in

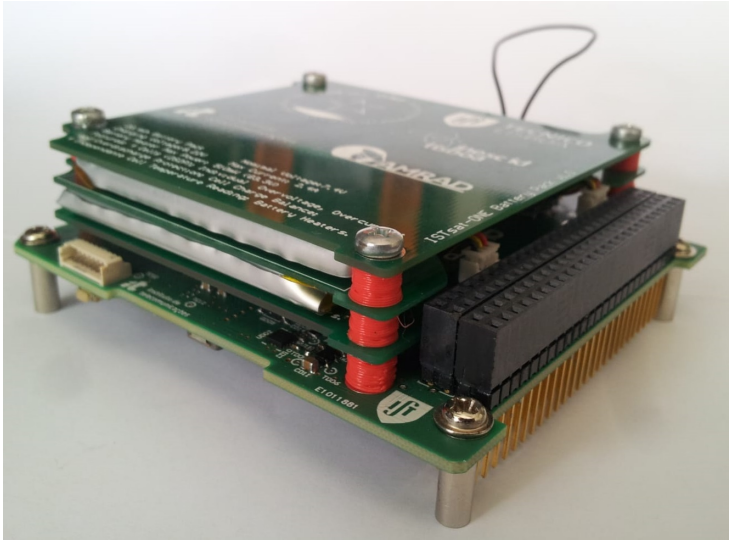

Figure 3.2: ISTsat-1 EPS with battery pack.

each series branch. The battery is connected to the EPS with a cut off power switch through the negative terminal of the battery pack, acting as one of the deployment switches. Also in the EPS there is also the RBF pull pin switch which ensures that the energy is also cut off.

Each battery cell has an internal protection circuit, a Protection Circuit Module (PCM) that protects from over-current, over-voltage/under-voltage (or over-charge/over-discharge). It also has a Negative Temperature Coefficient (NTC) thermistor, a temperature sensor. The system is redundant because the EPS has embedded over-current and over-voltage battery protection by both software and hardware. The software part has sensors that read the voltage and then opens switches, cutting power if needed. The hardware part is embedded in the cell balancing circuit. It uses a COTS device that provides voltage protection and automatic cell balance. The team implementation is placed directly into the battery. The balancing device will cut power when there is an over-voltage in each pair of cells, serving as redundant battery protection.

3.2.4 Structure and Mechanisms (STR)

The ISTsat-1 structure is composed of the elements of Figure 3.3. It is a custom made structure out of aluminium 7075-T6, carefully designed to meet all FYS and deployer requirements. Is is robust and, at the same time, easy to assemble and disassemble.

All PCBs have four holes, as one can see in Figure 1.2a, with screws inserted. Said PCBs will be between the -Z and +Z ribs, in the four axis, and with spacers in between them. Such spacers slide in the rods, and will be machined out of the same aluminium as the outside structure. The holes where the +Z rib meet the rods are not threaded while the -Z rib holes are. This means that, when all PCBs are assembled into the rods with their respective spacers, it is possible to do minor adjustments to the distance between the ribs. In order to permit such adjustment, the -Z tip of the rods are threaded and, at its end, there is an opening where a flat screwdriver can be used.

The +Y and -Y side frames have embedded CubeSats rails. These will contact with the insides of the

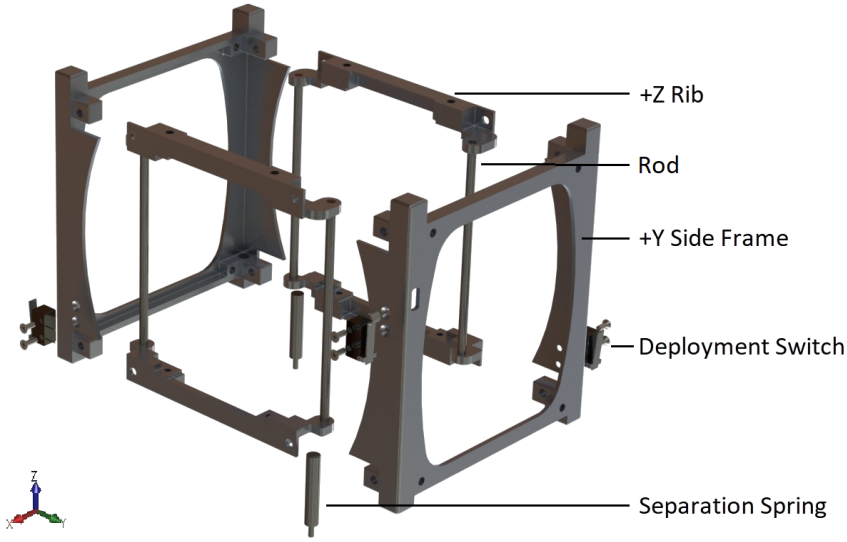

Figure 3.3: ISTsat-1 Structure.

deployer and to other CubeSats so, to prevent cold welding between them while in Space, the frames will be hard anodized. The separation springs will ensure adequate separation between the CubeSats in the deployer and the deployment switches, when pressed, will cut all power to the S/C.

To hold all components in place, a total of 30 screws will be used. More detail about dimensions and specifications will be given in the AIP plan. Up to this moment, finite element analysis have been performed to the structure and to the S/C as a whole. The team is confidant that it will survive all vibrational and thermal environments, and testing will be performed to verify such conditions.

Per FYS requirements, the S/C shall have a service port in the +X face. The ISTsat-1 has two service ports in the +X and -Z faces. The +X face is incorporated in the +X solar panel and has the purpose of charging the battery and communicating with the OBC through the main I^2C bus. It will be useful for routine maintenance when the S/C is inside the deployer. The chosen battery has a low self-discharge rate but, since the S/C may wait months before the launch, routine battery charging will be performed. It will also serve to communicate with the S/C in several tests such as the FFT, RFT and TVC. The -Z service port goes through the ADS-B antenna. It has the purpose of charging the battery and programming/flashing all subsystems. This service port will be useful if software changes are deemed necessary when the S/C is fully assembled.

3.2.5 Payload (PL)

The payload on the ISTsat-1 is composed of a ADS-B receiver and a ADS-B antenna. In this report, when there is mention of the payload, it refers to the ADS-B receiver.

The PL is responsible for receiving the 1090 Mhz ADS-B signals and then demodulating and decoding them. It is also responsible for the generation of housekeeping data, self diagnostics and error logs, changing between its operational modes and sending periodic ADS-B messages to the OBC. In case the primary I^2C bus is damaged, it can talk to the OBC or COM subsystem through a redundant I^2C bus. To prevent filling up the memory, the PL does message filtering. It can filter by aircraft, time, geography,

sampling rate, S/C altitude and speed, in a stand alone or multiple filter configuration.

3.2.6 ADS-B antenna

The ADS-B antenna is placed at the -Z face of the S/C, as one can see in Figure 3.4, and the ADCS will hopefully maintain the antenna directed at Earth. It is a non-deployable patch antenna, with a circular polarization, and it is custom made by the team. Due to its patch configuration, signals from aircraft can be received even the if the S/C presents residual tumbling.

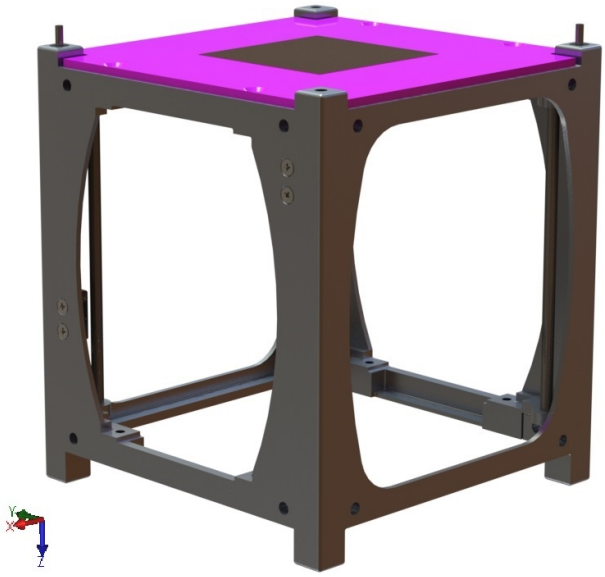

Figure 3.4: ISTsat-1 ADS-B antenna mounted on the structure.

Up to this moment, an antenna prototype has been developed, characterized and tested successfully in our facilities. Such prototype was made of another, cheaper material, as a proof of concept. The antenna for the EQM has already been manufactured and the testing process is undergoing.

3.2.7 Telemetry, Tracking and Command (TTC)

The TTC subsystem provides uplink and downlink capabilities, from and to the GS, respectively. It also has a beacon that will periodically transmit information about some S/C parameters.

Uplink, that is from the GS to the S/C, will be modulated in AFSK, and at 436 MHz. With a bit-rate of 1200 bit/s and bandwidth of 3 kHz, it is enough to send commands to the S/C. The S/C receives packets that are checked for their validity (e.g. did not loose a byte). If it is valid, the command from the GS goes to the respective subsystem.

Downlink is performed at 146 MHz, with speeds of up to 48000 bit/s, depending on the modulation, at the cost of bandwidth increase. The beacon will only send downlink messages, in morse code, and with a bit-rate of 20 bit/s. With this standardised messages, amateur ground stations around the world can listen to the S/C, identify it, and receive some housekeeping parameters of it. The major purpose of the beacon is to transmit information about the S/C, even if the OBC, TTC, COM and EPS malfunction.

If the EPS is functioning, it powers the beacon. If the EPS fails, the beacon can be powered solely by the solar panels. The beacon is the last resort in case of a catastrophically mission failure.

The TTC sends massages through the I^2C main bus to allow for diagnostics and its housekeeping data to propagate. It also sends messages received from the GS to the COM or to the OBC, if the S/C is in Normal Mode or in Safe Mode, respectively. In Normal Mode, the COM decodes and processes data received, but in Safe Mode that does not happen. Even though, in Safe Mode, the OBC is the sole responsible for handling communications between the GS and the S/C, it is too underpowered to accomplish serious AX.25 decoding. Decoding will be performed in the TTC while in Safe Mode. In this mode, the downlink modulation is basic, reducing the bit-rate to a minimum.

3.2.8 U/V antenna

The U/V antenna will provide downlink and uplink capabilities for the S/C and also for the beacon periodical transmission. This antenna will be bought, so it is a COTS product. It is deployable, compatible with the CubeSat standard and has flight heritage for our orbit. The antenna deployed can be seen in Figure A.1. Although the full extent of the antenna cannot be seen in the figure, it will be around 17 cm for UHF and 51 cm for VHF. The casing will be removed so that a circular hole in the centre of the antenna can be used to pass wires to the +Z solar panel. The deployment mechanism is locked by a wire and springs. When a current passes through the wire, it breaks, and the antennas are deployed.

3.2.9 Thermal Control (TC)

The thermal behaviour of the ISTsat-1 CubeSat was modelled, taking into account several factors such as orbit, attitude control, power used by the S/C, radiation from the Sun, Earth albedo and infra-red and the S/C material properties. The hard anodization of the +Y and -Y side frames will also dye it in black, providing a passive thermal control by better absorbing light.

The finite model outputted successful operational temperature ranges, with a $\pm$ 10°C of uncertainty, for all components, with the exception of the U/V antenna. The operational range of the antenna is defined according to the deployment mechanism, which will only take a few seconds. In the majority of the antenna lifetime, it will be within the operational range. Also, since the antenna is a passive component after deployment, it will not require the given operational temperature.

Chapter 4

Space Debris Mitigation

Space debris mitigation measures have the purpose of reducing the fragmentation and collision event probability both in orbit and in case of re-entry, by slowing down unnecessary orbital population growth. They serve as guidelines to verification methods and their execution [34].

4.1 Scope and purpose

This chapter aims to verify compliance status between the ISTsat-1 project and the ESA Space Debris Mitigation (SDM) requirements defined by [34], such as:

- To prevent uncontrolled growth of abandoned spacecraft and spent launch vehicle stages with particular regard to preserve the LEO and GEO Protected Regions;
- To prevent debris generation as a result of intentional release of mission-related objects or break-up space systems;
- To prevent accidental break-ups as a result of explosions of components storing energy on-board space systems;
- To prevent orbital collisions by performing collision avoidance and disposal maneuver to limit long-term presence of non-operational space systems in the protected regions;
- To limit casualty risk due to controlled or uncontrolled re-entry of space systems.

Where the LEO and GEO Protected Regions are defined by [54] as:

- LEO protected region is the spherical shell region that extends from the Earth's surface to an altitude of 2000 km;
- GEO protected region is the intersection between a latitude sector of $\pm$ 15° from the equator and a spherical shell with lower and upper boundary altitude of $\pm$ 200 km from the average of $35\,786$ km.

4.2 Mission profile

The spacecraft is planned to be launched into the ISS in a cargo resupply mission in the beginning of 2020. The launcher is still unknown and is not chosen by the team. When it arrives at the ISS, it will go into a robotic arm in the back of the space station and will be angled down 45° to Earth. There is an uncertainty on the CubeSat deployer to be used but, as a comparison, NanoRacks has a ejection speed of around 1 m/s[1]. Since the ISS average speed is of 7.7 km/s, the ejection speed is negligible. This means that the S/C will assume a very similar orbit to the ISS. Since there is no specific date for the launch, we generated the historical ephemeris of the ISS using JPL's (Jet Propulsion Laboratory) HORIZONS system[2] between September 4th, 2010 and September 3rd, 2017, with intervals of 200 minutes. The objective was to assess the probable orbit at launch and build three scenarios: a best, probable and worst case from debris point of view for the time until re-entry. That is, the longer the time in orbit, the worst, as the probability of collision increases. Results are presented in Figures 4.1 and 4.2.

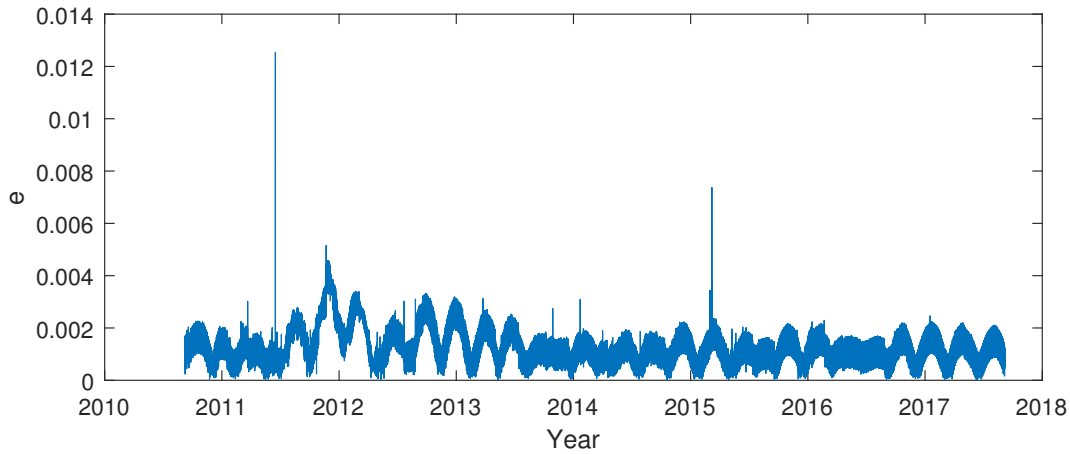

Figure 4.1: ISS orbit eccentricity from Sep. 4, 2010 to Sep. 3, 2017.

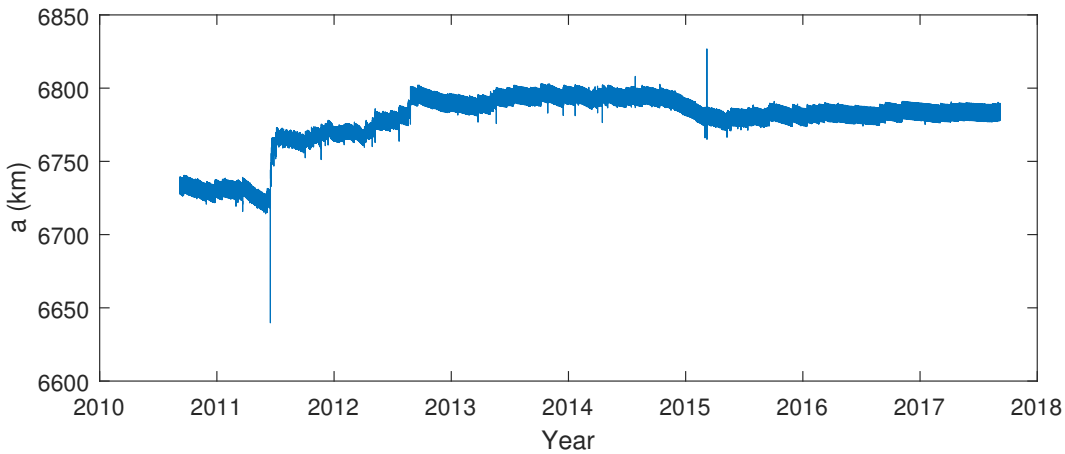

Figure 4.2: ISS orbit semi-major axis from Sep. 4, 2010 to Sep. 3, 2017.

[1] NanoRacks website, http://nanoracks.com/graphene-testing/, consulted at the 19th of April 2018
[2] JPL's HORIZONS web-interface, https://ssd.jpl.nasa.gov/horizons.cgi, consulted at the 3rd of September 2017

From Figure 4.1, the eccentricity of the ISS orbit is approximately periodic and with around the same variation over the 10 years considered. Excluding the outliers, we get an eccentricity between 4.67×10^{-6} and 5.10×10^{-3}, with an average of 1.13×10^{-3}. Since null eccentricity means that the orbit is circular and this values are small in modulus, we can consider a quasi-circular orbit for the S/C.

Then, in Figure 4.2, we note that the semi-major axis varies between 6775 km and 6790 km after June 2015. Previous to this date, the semi-major axis varies considerably more, from around 6725 km to 6800 km. We considered as more probable that, at the time of launch, the semi-major axis would vary according to the interval between June 1, 2015 and September 4, 2017 because it has a small variation and it is the closest available data to the launch date. This interval of time is shown in Figure 4.3. Thus, from the figure we get minimum semi-major axis of 6773 km, maximum of 6790 km and average of 6782 km.

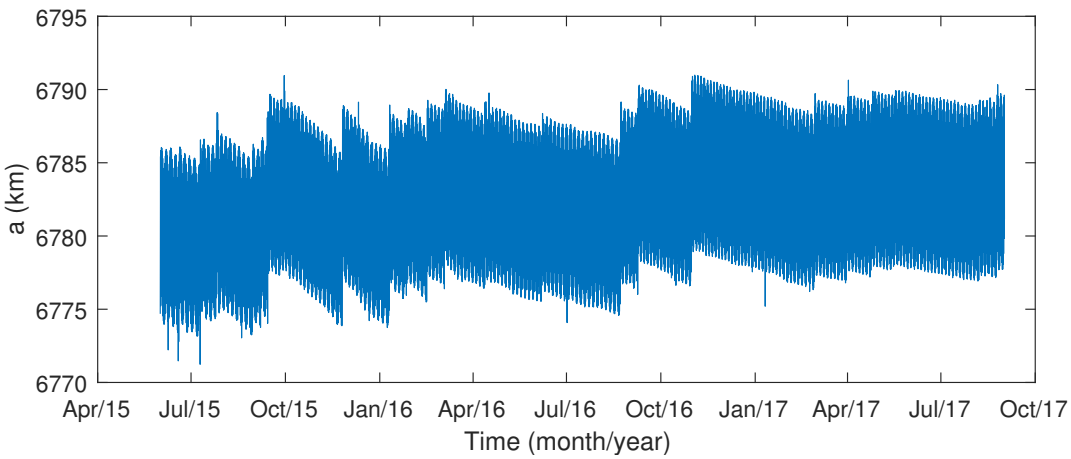

Figure 4.3: ISS orbit semi-major axis from Jun. 1, 2015 to Sep. 3, 2017.

As mentioned, we call the worst-case scenario the one that provides the longest time in orbit. We also considered the minimum eccentricity for the maximum semi-major axis and vice-versa, as this lead to the desired extreme values. The remaining orbital parameters are not as important to determine the S/C's orbit lifetime. ISS's orbit inclination practically do not vary. The right ascending of te ascending node, argument of perigee and mean anomaly all vary periodically with time but, since there is no prediction for the launch date, we considered the values provided by JPL's HORIZONS system at September 3, 2017, 22:40:00.0000. With that in mind, we arrive at the orbital parameters of Table 4.1.

Table 4.1: Obtained orbital parameters.

Orbital parameter	**Worst-case**	**Probable case**	**Best case**
Semi major-axis (km)	6790	6782	6773
Eccentricity	4.67×10^{-6}	1.13×10^{-3}	5.10×10^{-3}
Inclination (deg)		51.7	
Right Asc. of Asc. Node (deg)		9.3	
Argument of Perigee (deg)		132.8	
Mean Anomaly (deg)		279.5	

4.3 Space system description

Although the S/C has already been described, some points have to be highlighted due a probable cause for debris creation or re-entry casualty. Systems that do not have space flight heritage and are not space qualified, are deployable, hold energy or high pressure and have material capable of surviving re-entry go in this category.

Space flight heritage means that the component already flew on a successfully mission or it wasn't a cause of failure and space qualified means that the system went through a qualification phase during its development process, with harder levels than ones expected in space and survived. The ISTsat-1 has two space qualified and space flight heritage systems: the UHF/VHF (Ultra high and very high frequency, respectively) antenna deployer and the solar panels. The remaining products are custom-made by team members, COTS (commercial off-the-self) solutions or a mix of the two. Regarding systems that hold energy or pressure, the S/C only has the batteries. Material capable of surviving re-entry is unlikely but it will be assessed in this Section 4.4.7.

Since no fluid or propellant is used, the S/C mass will remain constant throughout the mission. From the team mass budget in [55], we set a probable launch mass of 900 grams. This is within the FYS requirement of the S/C mass being less than 1.330 kg [51]. The probability of mass increasing is greater than it decreasing. With that in mind we considered that in the worst-case scenario the mass increases 200 grams and in the best case it decreases 100 grams. With this reasoning we arrive at the values of Table 4.2.

Table 4.2: S/C mass for the three scenarios considered.

Mass (kg)		
Worst-case	Probable case	Best case
1.1	0.9	0.8

4.4 Mitigation compliance verification

Seeing that this is an ESA backed project we shall follow their verification methods and implementation of mitigation measures defined in [34]. The document follows standard ISO 24113:2011 but, due to copyright issues, it cannot fully express the requirement text. We are left with broad requirements, enough to prove compliance with space debris mitigation policy.

4.4.1 Mission-related objects

Mission-related objects (MROs) are objects separated or unintentionally released during a normal mission phase [34]. Objects larger than 1 mm shall not be liberated. With the use of components not subject to the release of objects or the use of space qualified components on the outermost parts of the S/C, this risk is mitigated. In fact only one face of the cube do not has a space qualified component, the ADS-B antenna. As it is planar, has no moving parts and will undergo a qualification process, it does not pose

a risk for MROs release. The remaining faces have solar panels and a deployable antenna, all space qualified and space flight heritage, posing no risk for MROs release.

4.4.2 Fragmentation and explosion risk

The S/C could break-up during transport to the ISS. This is mitigated with vibration tests that will be performed before launch. They have a predetermined profile and intensity, in conformity with the launch provider, and will be assessed in Section 5.4.7. Note that these tests will be performed on higher levels than the vibration intensity output expected from the launcher and also, that the launch into the ISS will happen in a resupply mission, subject to lower vibration levels than a typical satellite mission.

Another cause of possible accidental break-up scenario is the deployment of the antennas for communication. To minimize the probability of this to happen we use space-qualified and space flight heritage deployable antennas. To prove that they work we will deploy them two times, as they are certified to do it three times. The final deployment will be in orbit. More details on testing are present in Section 5.4.9.

Catastrophic collisions could break-up the entire S/C but, due to its small cross-area and expected mission duration to be less than one year, the collision probability is not expected to be considerable. It will be assessed in Section 4.4.4.

Regarding the explosion risk, only the batteries posse a risk for the mission and space debris creation because they are the only component capable of storing energy. They must withstand the vibration and acceleration of launch, elevated charge/discharge cycles, operate over a wide range of temperature, cannot emit gases and operate in vacuum. To prove that they hold, have no defects and function properly in space conditions, they shall be tested. Two different plans are considered to mitigate this risk and they are present in Section 5.3.4.

4.4.3 Pyrotechnic particle release

Pyrotechnic particles are released in random directions when a device produces thrust in space. To mitigate the risk of operational space systems, the device shall expel particles not bigger than 1 mm in size. Since the S/C do not have such devices, this risk in inexistent.

4.4.4 On-orbit collision risk

An on-orbit collision risk is necessary to decide if mitigation procedures have to be implemented (e.g. avoidance manoeuvres). This was assessed with ESA's tool DRAMA-MIDAS.

The S/C shall have collision avoidance capabilities if there is a significant probability of being in a collision considered catastrophic. This happens when the event has a energy-to-mass ratio (EMR) of at least 40 J/g [34] and is defined as:

$$\text{EMR} = \frac{\frac{1}{2} M_D V_{imp}^2}{M_{S/C}} \tag{4.1}$$

where M_D is the debris mass, V_{imp} the maximum impact velocity and $M_{S/C}$ the spacecraft mass. To calculate the impact velocity in the worst-case scenario, the collision is frontal and the sum of both S/C and debris velocities. The S/C is at the perigee where it is the fastest and the debris is in a circular orbit with the same radius of the S/C perigee. With that in mind we arrive at the following equation:

$$V_{imp} = \sqrt{\frac{2\mu}{r_p} - \frac{\mu}{a}} + \sqrt{\frac{\mu}{r_p}} \tag{4.2}$$

where, μ is the gravity constant for Earth, r_p is the perigee radius (smallest distance during a orbit to the Earth centre; was assumed at 350 km plus Earth's radius) and a is the semi-major axis. Since a for all scenarios considered do not pose a significant impact velocity difference (less than 0.1%), the probable semi-major axis was considered. With Equations 4.1 and 4.2 we get the threshold mass for the debris:

$$M_D = \frac{2\ \text{EMR}_{cc}\ M_{S/C}}{V_{imp}^2} \tag{4.3}$$

where the EMR_{cc} is the critical energy for the collision to be considered catastrophic and $M_{S/C}$ is the lowest mass of the spacecraft from Table 4.2. With these considerations, the minimum debris mass capable of insuring a catastrophic collision event is of 2.08×10^{-4} kg.

Inputs of the program were chosen to get the worst-case scenario, that is, the largest on-orbit collision probability. They are:

- Mission duration of 3 years. This interval of time is larger than the maximum mission duration foreseen. It will be assessed in Section 4.4.5;
- Business as usual. This means that no mitigation measures are implemented in launches after May 1st, 2009 and that they are performed at the same rhythm as in that period;
- Orbital parameters from all scenarios considered and present in Table 4.1;
- Debris with weight in the 2.08×10^{-4} kg to 100 kg interval;
- All debris and meteorites sources available (e.g. from explosions, collisions, combustion droplets);
- Impact flux analysis with surface definition of a 0.05 m^2 sphere. Using DRAMA-CROC, the S/C has a maximum cross section of 0.0172 m^2. The chosen surface area is bigger, contributing to the worst-case scenario. Additionally, it is the smallest area that makes the program to converge.

With all these inputs, the cumulative collision probability obtained is of 3.00×10^{-5}. This value does not include avoidance manoeuvres because there is no propulsion system in the S/C so it cannot decrease. Graphs showing the collision probability versus impactor mass and diameter are present in Figure 4.4. Note that all debris in the graphs shown have the possibility of ending the mission and propagating space debris, from orbing particles as small as five millimetre, to items as big as one meter in diameter. This proves the importance of mitigation policies for the future of space exploration. Regarding our case, the collision probability do not poses a significant risk for the mission and for the creation of space debris.

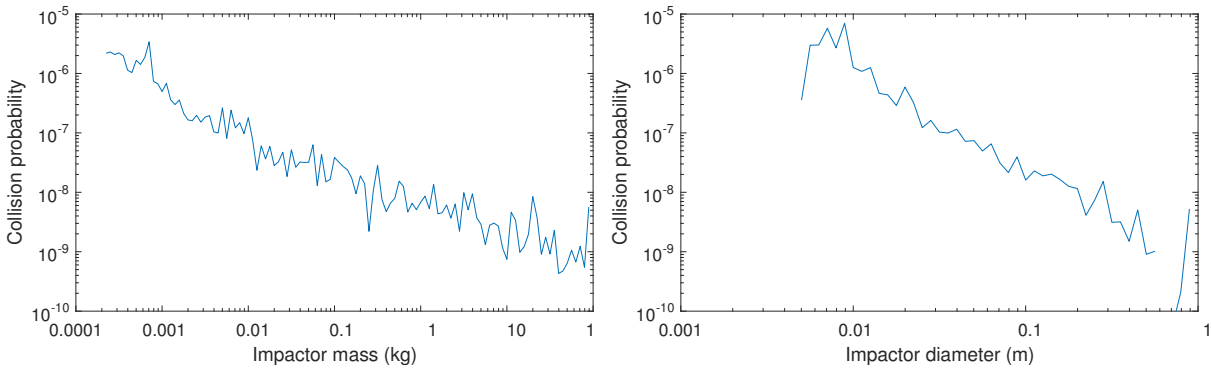

Figure 4.4: Collision probability vs impactor mass and diameter, respectively [56].

4.4.5 Disposal

International space debris mitigation requirements state that a space system shall be disposed of, minimizing the risk of remaining in the LEO or GEO Protected Regions after End-Of-Life (EOL) [34]. This disposal can be controlled or uncontrolled but, since the S/C does not have a propulsion system, it will be uncontrolled. It can orbit or intersect a protected region for an amount of time capped at 25 years. This timer starts after the first interference with a protected region, when the launch stage is released and stops after atmospheric re-entry or when it reaches a disposal orbit. In this case, the timer starts when the S/C is released from the ISS and ends when it re-enters.

To assess the S/C lifetime we used DRAMA-OSCAR. Three scenarios were considered with initial date of January 1st, 2020, Monte Carlo sampling of order 5 as recommended in [34] and reflectivity coefficient of 1.2. Differing values from each scenario are present in Table 4.3.

Table 4.3: Scenarios for the disposal assessment.

	Worst-case	**Probable case**	**Best case**
Orbital parameters		See Table 4.1	
Dry mass		See Table 4.2	
Cross-sectional area (m^2)	0.0100	0.0149	0.0172
Drag coefficient	2.0	2.2	2.4

Where the cross-sectional area was computed with DRAMA-CROC for a 1U CubeSat, with the probable case being the average area of a randomly tumbling satellite. For the worst-case scenario only one face was considered because it decreases induced drag and makes the orbit lifetime to increase. The opposite happened for the best case, the cross-sectional area is the maximum. The probable drag coefficient was recommended in [34]. For the worst and best case scenario it was decreased/increased 20%, respectively.

The considered scenarios show that the S/C does not orbit inside the LEO or GEO Protected Regions after the EOL for more than 25 years. The probable lifetime is of around one year.

We considered that the ISS orbit semi-major axis would not change outside of the scope of Figure 4.3, i.e. from June 2015 to September 2017. If, for some unforeseen reason, the altitude variation is bigger, i.e. from September 2010 to June 2015, the worst and best case scenario would change. For

Table 4.4: Re-entry point computed with DRAMA-OSCAR.

	Wost-case	**Probable case**	**Best case**
Date of re-entry (year-month-day)	2021-09-27	2020-12-20	2020-08-04
Semi-major axis (km)	6497.34	6496.29	6496.74
Eccentricity	1.243×10^{-4}	2.846×10^{-4}	2.160×10^{-4}
Inclination (º)	51.57	51.57	51.57
Right ascension of ascending node (º)	37.11	5.21	339.99
Argument of perigee (º)	15.88	80.67	313.45
Mean anomaly (º)	212.84	60.81	80.38
Remaining lifetime of target orbit (years) (incl. margin of 5.00 %)	1.83	1.02	0.62

this larger altitude interval, the worst and best case scenarios for the time until re-entry are 0.21 years and 1.98 years, respectively. The worst-case scenario is within the requirement maximum limit of 25 years [51] but not the best-case one. The mission duration has to be at least 0.25 years [51]. The two factors that contribute for the short mission duration are low launch altitude and mass. The first factor is unlikely to happen as shown in Figure 4.2, as since 2012 the ISS altitude has been consistently higher. The second factor is also unlikely to happen since the current estimated mass is already higher and it has been increasing during the design process. In case this improbable event happens, additional mass can be added during the build phase.

4.4.6 Passivation

Passivation is the process of depleting all energy sources or making them safe in a controlled way to prevent break-ups. In our case, the only subsystem that stores energy is the EPS, in the form of chemical energy inside of batteries. This process shall be performed in CubeSats whose mission is planned to be completed before the end of their operation [51]. Since our mission will continue until the end, no passivation measures will be implemented.

4.4.7 Re-entry

The S/C will re-enter Earth's atmosphere in an uncontrolled way. That is, no measure will be implemented to direct it to the ocean or unpopulated regions. To prove that the casualty risk is less than 1 in 10,000 regarding re-entering debris that reach the ground, a tool called DRAMA-SARA was used.

The computation was made by using the expected atmosphere re-entry point in space and time from Table 4.4, in all scenarios considered. It assumed a world population of 9000 million people. An United Nations survey estimated that, even 10 years after the re-entry date, the human population would not reach this value, making it the worst-case regarding casualty risk [57]. It also used the object definition present in Table 4.5.

These materials were chosen as a representation of the final satellite, with exceeding mass to prove the burn-up upon re-entry in the worst-case scenario and in case some unforeseen material is added to the satellite. The output from DRAMA-SARA is that no object survives re-entry, meaning that the satellite burns-up completely entering the Earth's atmosphere. This brings no risk to the human population,

Table 4.5: Object definition inserted into DRAMA-SARA.

Object	Shape	Width (m)	Length (m)	Height (m)	Mass (kg)	Material
Parent	Box	0.1	0.1	0.1	0.340	n/a
Solar panels	Plate	0.08	0.08	-	0.2	n/a
ADCS, payload antenna	Plate	0.01	0.01	-	0.080	Copper
Structure, fasteners	Plate	0.05	0.05	-	0.140	Steel
PCBs, connectors	Plate	0.05	0.05	-	0.060	Tin
PCBs	Plate	0.05	0.05	-	0.200	FR-4
Structure, housing, nuts	Plate	0.05	0.05	-	0.020	Brass

fulfilling the requirement that the casualty risk is less than 1 in 10,000 for the re-entry.

4.5 Discussion

The expected mission orbit was derived from the ISS's, because the CubeSat will be launched from there. It yielded a probable orbit time of around one year, making disposal manoeuvres not necessary.

The release of mission related debris and fragmentation events was analysed, which outputted a negligible risk. Mechanical testing will be performed to confirm the analysis, as described in Chapter 5.

An explosion risk may be caused by the custom-made batteries. The mitigation plan is to test them extensively, as will be described in Chapter 5.

There is also a negligible risk for on-obit collisions, so no avoidance manoeuvres will be implemented.

The passivation of the CubeSat at the end of its mission is not necessary because the mission will end when it re-enters.

The re-entry casualty risk was also accessed and, due the low CubeSat mass, it will disintegrate, posing no risk for the Human population.

Chapter 5

Assembly, Integration and Verification Plan

As previously said, the assembly, integration and verification is the blueprint for verification at component, subsystem and system level, both functionally and mechanically, and at ambient and environmental conditions. This Chapter will analyse the AIV plan for the ISTsat-1 CubeSat through these phases.

Up to this moment, development models for the ISTsat-1 subsystems were built and are currently being tested individually and integrated in the process known as flat-sat. A flat-sat board was developed and the PCBs sit on top of then, as one can see from Figure 5.1. The structure prototypes served to consolidate the design and perform fit-tests to the subsystem PCBs. The ADS-B antenna has performed the characterization of its prototype in an anechoic chamber. It was a success and now the final antenna is being characterized.

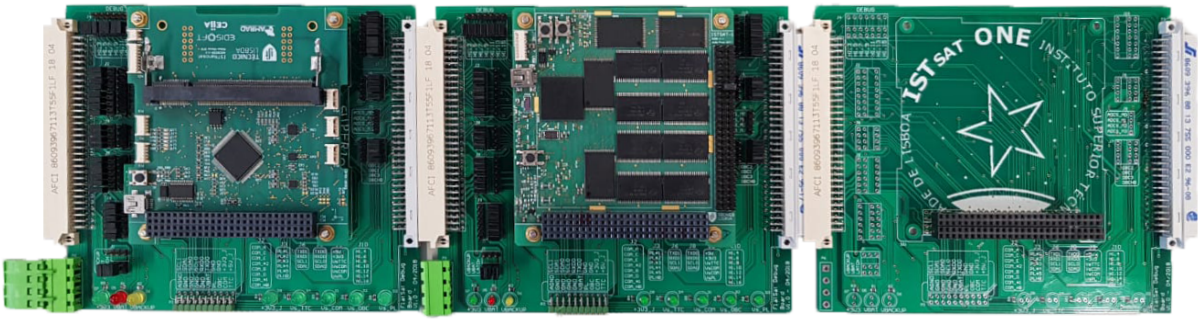

Figure 5.1: ISTsat-1 flat-sat with OBC and COM prototypes, from left to right.

The majority of the verifications performed until now are functional. This chapter describes the plans to continue the functionality assessment of the subsystems, the whole S/C and communication tests with the ground station. Then, the mechanical and thermal tests are detailed, to check the S/C compatibility with launch and space conditions. At this moment, most of the procedures detailed in the next sections are waiting for approval. Most of them were already reviewed by a FYS monitor or ESA specialist, RIDs were generated and a changed procedure was sent. The verification methods are tailored from the ECSS for verification [43] and testing [44].

5.1 Model Philosophy

A hybrid model philosophy was chosen. Firstly, the team will build an Engineering Model (EM), with all of the S/C components, except the solar panels and U/V antenna. This model will undergo functional verification and environmental qualification testing. As soon as the team has a considerable degree of confidence in the hardware and software of the EM, we will build the Proto-Flight Model (PFM), which will undergo functional verification and environmental qualification levels with acceptance durations.

The confluence of the EM and PFM resulted from a low tolerance to risk, high cost of space heritage components and inexperienced team regarding spacecraft integration and environmental tests. By practically manufacturing and assembling the S/C two times, a great deal of experience and knowledge will remove some unpredicted errors and unpractical assembly and test procedures. A general verification flow of the EM and PFM of the ISTsat-1 CubeSat is presented in Figure B.1 and Figure 5.2, respectively. Depending on the work done, each step will have a more or less detailed verification procedure, which will be presented in this thesis.

Figure 5.2: PFM general verification flow.

5.2 Verification Facilities

A part of planning all verification procedures is to choose the test facilities. A list of all AIV facilities and their function is present in Table 5.1.

Table 5.1: AIV facilities.

Company Name	Equipment/Facilities
Active Space	Shaker for mechanical testing
	Thermal vacuum chamber for TVC and bake-out
ANACOM	Anechoic chamber for EMC tests and antennas characterization
ESA (ESTEC)	Shaker for mechanical testing
	Thermal vacuum chamber for TVC and bake-out
	Anechoic chamber for EMC tests
INESC	Clean room for assembly, integration and testing
IST	Hardware rooms for prototyping and functional verification
	Ground Station
	Helmholtz coil with air bearing system for ADCS calibration
	Vacuum chamber for battery cell leak tests
TAP	Anodization of the structure

5.3 Verification on Subsystem Level

Vrification on subsystem level will happen before the S/C is assembled and integrated. It comprises soldering evaluation, conformal coating, anodization, battery tests, antenna tests and ADCS calibration.

5.3.1 Soldering

Soldering is a process where two or more components are joined together by melting a metal. PCB soldering joins components such as microprocessors, resistances, and others, to the PCB. Beside the adhesive function, it is also used to conduct electric power to the component.

In the ISTsat-1 team, soldering will be done “in house”. That is, elements from the team will do the process. Some team elements have experience doing this procedure and four elements participated in an ESA workshop where soldering was something taught. According to [58], the first inspection procedure is visual verification. Solder connections are acceptable if they are clean, smooth, visual contour of wires and leads can be determined and have an acceptable amount and distribution of solder in accordance to figures of clause 15 of [58]. Solder connections are rejected if they are fractured of cracked, parts are charred, burned or melted, there are foreign material on circuitry or on adjacent areas and impaired stress relief. With the help of figures present in the standard, identification of deviant soldering is faster and with greater amount of success.

Regarding environmental testing, the standard states that it is necessary to perform vibrational testing and thermal cycles with bake-out. The team plans that bake-out will only be performed during the test program on subsystem level, after conformal coating have been applied. Vibration and thermal cycles will happen on system level, both in qualification and acceptance. There will be continuous testing on

the PCBs by means of software. If any sensor, resistance, diode or others is misplaced or not working, the software will lose functionalities and hardware problems can be found.

5.3.2 Conformal Coating

Conformal coating will be applied to all PCBs in the ISTsat-1 CubeSat. It can be transparent and its thickness is typically $25\,\mu m$ to $250\,\mu m$. Such procedure is necessary to protect them against moisture, dust, chemicals, reduce the influence of extreme temperatures, corrosion and electrical failures [59]. This means that this coating is useful both for ground and space handling.

An acrylic conformal coating will be applied "in-house", that is, elements from the team will apply it. Firstly the team will clean the PCB from moisture, dust, and other contaminants. Depending on the viscosity, a thinner may be applied. The product, mixed or not, may present bubbles which should go to a vacuum chamber before applied on the PCBs. Then, a operator will apply the coating using a brush, and wait ten minutes per layer to dry. In there are bubbles present, they can be popped using a sharp probe. Our specific coating used has a 24 hours of cure time at room temperature or 30 minutes at 76°C. To ensure a proper out-gassing of components and also cure the coating, a vacuum bake-out will be performed to all individual PCBs. A RFT shall take place before the coating is applied and after the bake-out procedure. The bake-out levels are discussed in Section 5.4.8.

To confirm a good coating, this specific coating fluoresces under UV light. A visual inspection is performed under such light, after the bake-out. Problems can occur if the thickness is too low/high. If it is too thin, a good coverage is difficult. If it is too thick, it can create excessive stress on solder joints. Other problems are bubbles, which are reduced when the S/C goes trough vacuum tests. If there is a need for repairs, the coating can be removed using a sharp probe and then re-applied.

5.3.3 Anodization and Thermal Cycling

The aluminium structure will be anodized by the company TAP (Portuguese Air Transportations). It will create an outer layer of aluminium oxide, protecting it from cold welding when inside of the deployer. According to an ECSS standard on thermal testing of space materials and processes [60], the way to confirm a good workmanship regarding anodization is by visual checks and peel tests after thermal cycling. The second form of confirmation is by performing a minimum of 100 cycles, between -100 °C and 100 °C, at a nominal heating or cooling rate of 10°C/minute, and with dwell time of at least five minutes.

There was a recommendation from an ESA material specialist to include thermal cycling in all materials that suffer anodization. The recommended number of cycles for the test was divided in 10 for the TVC and 90 for an atmospheric pressure environment. The peel test would be successfully if no peel was detected. As for Active Space's equipment, the 10 °C/minute temperature change rate is not possible. Regarding thermal cycles at atmospheric pressure, the team does not have equipment readily available and capable of providing the temperature variation, the maximum/minimum temperatures and the amount of non-stop time that the test needs.

This test is an example of how the testing and risk are assessed in conventional S/C and CubeSats. Most teams do not have such a demanding thermal cycling test. They typically go to facilities with a great deal of experience in the anodization process and then only perform visual verification. Our team is planning to do just that. At this moment, the team is unsure on the necessity of this test and waits for more feedback from specialists on the matter.

5.3.4 Battery

Battery cells will be bought and assembled into a battery pack by team members. Although the cells are COTS products, since the team will assemble them, they fall to the category of custom made components, and have to be tested accordingly. The battery pack is composed of four Lithium-Polymer cells, with cell and battery characteristics as in Table 5.2.

Table 5.2: Cell and Battery Characteristics.

Cell Description	
Chemistry	Lithium-Polymer
Length	max 60.5 mm
Width	max 37.5 mm
Heigh	max 5.4 mm
Manufacturer and Model	Varta, LPP 503759 8HH
Nominal OCV	3.7 V
Maximum Voltage	4.275 V $\pm$ 25 mV
Minimum Voltage	2.3 V $\pm$ 58 mV
Rated Capacity	1.400 Ah
Maximum Rated Discharge Current	2000 mA
Maximum Recommended Charge Current	1980 mA
Minimum and Maximum Discharge Temperatures	-20 ^{o}C to +60 ^{o}C
Minimum and Maximum Charge Temperatures	0 ^{o}C to +45 ^{o}C
Minimum and Maximum Storage Temperatures	-20 ^{o}C to +25 ^{o}C (1 year)
Date of Manufacture (Mo/Yr)	04/17
Cell Protection	
Over-charge	4.275 V $\pm$ 25 mV (0.7 s to 1.3 s delay)
Over-discharge	2.3 V $\pm$ 58 mV (14 ms to 26 ms delay)
Over-current	2 A to 4.5 A (8 ms to 16 ms delay)
Battery Information	
Quantity of total cells	4
Cell connectivity	2S2P
Nominal OCV	7.40 V
Maximum Voltage	8.55 V $\pm$ 100 mV
Minimum Voltage	4.6 V $\pm$ 116 mV
Battery Life	
Purchase date (Mo/Yr)	05/18
Shelf life	1 year at T= -20 ^{o}C to +25 ^{o}C
Lifetime (battery cycles, 80% of initial capacity)	500 cycles $>$1098 mAh, 23 ^{o}C

Each cell is certified according to the second edition of IEC 62133. This means that each cell is certified to endure: external short circuit at 55 ^{o}C, free fall from one meter, thermal abuse of 130 ^{o}C for 10 minutes with temperature rate of 5 ^{o}C/minute, crush with force intensity of 13 kN, over-charging with current of 2C and forced discharge of 1C for 90 minutes. Note that discharging at 1C means that

the cell will completely discharge in one hour and 0.5C means that it will discharge in two hours. The same logic applies to the charging procedure. Each cell protects against the maximum voltage (over-charge), minimum voltage (over-discharge) and over-current detection, whose values are detailed in Table 5.2. The ISTsat-1 EPS has circuits in place to provide battery level protection, which were detailed in Section 3.2.3.

The causes of cell or battery loss due to degrading or, at an extreme point, battery explosion depend on over-charge, over-discharge, internal short-circuit, external short-circuit, over-temperature and over-pressure. Each cell and the EPS battery protection circuits cover against over-charge and over-discharge and these protections will be tested by the team. Internal short-circuits were tested by the manufacturer with free fall from one meter. External short-circuits were tested by the manufacturer and will be tested by the team. Over-temperature was tested by the manufacturer with a 5 ^{o}C/minute gradient until it reaches 130 ^{o}C, with a dwell time of 10 minutes. Over-pressure was tested by the manufacturer with a crush with force intensity of 13kN. The mechanisms put in place are redundant, protect both at the cell and battery level and will be tested separately for any flaw.

A battery failure would not provoke the end of mission because the EPS can power the S/C without batteries, when there is Sun exposure in the solar panels. On the other hand, if the battery explodes, there is no certainty about the creation of space debris. To prove that the explosion does not happen, the battery will be tested with harder environmental levels than the expected in space.

The S/C with be delivered to the launch provider at least three months before launch. Following [61], lithium polymer batteries “must be shipped at a State of Charge (SoC) not exceeding 30% of their rated design capacity”. This means that, at the time of launch, the battery SoC will be lower than 30%, reducing the risk for any explosion or its severity. During re-entry, the battery will experience high temperatures, outside of their operational range. Since there are no passivation measures implemented, the worst case scenario is that the battery is fully charged. This would probably provoke a thermal runway of the battery and an explosion during re-entry. This would cause no risk for the population because the S/C will disintegrate during this phase and will not reach Earth’s surface, as analysed in Chapter 3.

The testing approach was based in two documents [62, 63]. The first being NASA crewed space vehicle battery safety requirements because the ISS is a crewed space vehicle, and any battery going there has to prove its security. The second document used is a battery test report of UPSat. This CubeSat was launched from the ISS in May 2017 and the batteries were not a cause of failure. They used lithium-ion cells, so they have similar cell technology to the ISTsat-1.

The ISTsat-1 cells will all be acceptance tested and then, from the cells that pass such test, random cells are chosen to undergo qualification testing. Cells that go through qualification tests are then discarded. If the second test is successful, the accepted cells are used in the EM and PFM.

Acceptance Testing of Battery Cells

Acceptance testing shall be made to all cells, including the ones that are used as spares. According to [62], “All flight cells and batteries should undergo acceptance testing that includes, as a minimum, verification of battery performance to mission requirements by charge/discharge cycling, vibration, and

vacuum leak checks".

Regarding vibration tests to all cells, the team proposes to make a MGSE (Mechanical Ground Support Equipment) that holds 16 cells per test. The concept is shown in Figure 5.3.

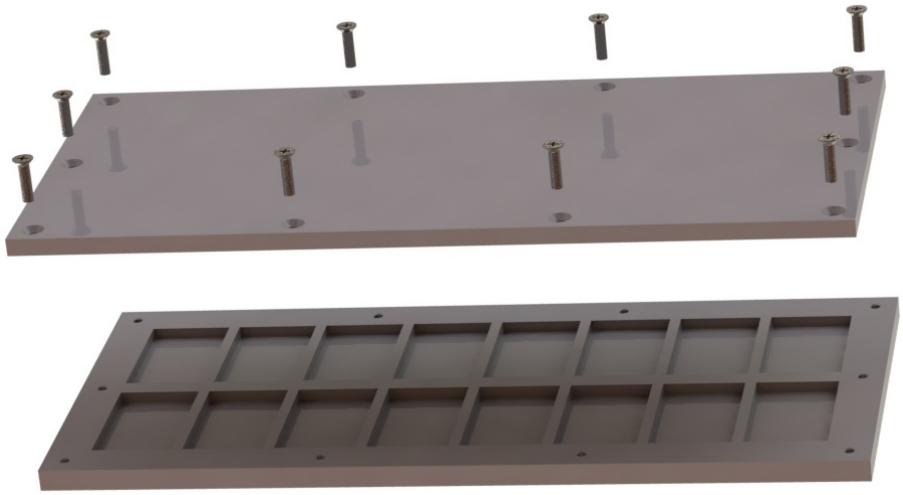

Figure 5.3: Conceptual design of a MGSE for cell vibration testing.

The acceptance test plan is now described.

Internal Resistance and Voltage Drop Each cell has around $100\,\mathrm{m}\Omega$ of internal resistance and a higher value means that the cell is less efficient. The Open Circuit Voltage (OCV) is the maximum reference voltage, and it is measured with the circuit open and only with the voltmeter connected to the cell terminals. To obtain the internal resistance of the battery cell, the circuit in Figure 5.4 is used.

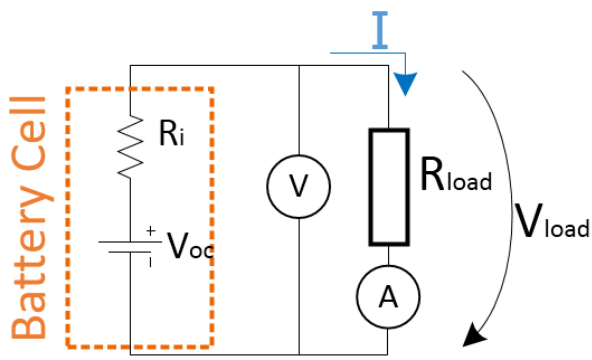

Figure 5.4: Circuit to measure the internal resistance of a cell.

Measuring the voltage across the load terminals and the current in the circuit it is possible to calculate the internal resistance.

$$R_i = \frac{V_{OC} - V_{load}}{I} \tag{5.1}$$

This measurement should be made with a R_{load} low enough (typically below $10\,\Omega$), so that the voltage difference is higher. By definition the voltage drop is $V_{drop} = V_{OC} - V_{load}$. In order to measure the

voltage drop, the same procedure used to obtain the internal resistance is applied but at two different temperatures. In these cases, the cell is put in a fridge or oven until its temperature stabilizes. Then, the cell is removed and the V_{OC} and V_{load} measurement is performed, and then the V_{drop} on both cases is compared. As the temperature varies, so should its internal resistance vary, and thus the V_{drop} will reflect this difference. Outlier cells from the pack are discarded.

Charge Cycling Each cell has a typical capacity of 1400 mAh. Since there are two pairs of cells in parallel, the total cell capacity is 2800 mAh. The cell charge cycle current will then be C/4, that is 700 mA. Three charge/discharge cycles will be performed to each cell. Current, voltage and temperature will be measured throughout the cycles and logged for post-test analysis. After the charge cycles, the capacity is compared to the nominal capacity provided by the manufacturer.

Vibration qualification These tests will be conducted at Active Space. It will consist in a resonance search, sine vibration, resonance search, random vibration and another resonance search. The test specification is the same as in the system qualification, the worst case (at acceptance levels) of the FYS Design Specification, because the launcher is yet to be defined. Accelerometers will be added to the MGSE to obtain more independent measurements. After these tests, a complete charge, discharge, cycle is performed. Then the capacity is measured.

Vacuum leak Each cell physical characteristics (scrapes, dents, bulges, length, width, height and mass) and OCV are logged before the test. Then, they are put inside of a vacuum chamber at 10^{-5} mbar for six hours. After being in vacuum, each cell physical characteristics and OCV are measured. If there is no noticeable change relatively to the measures before the test, and if there is no cell rupture or burst, the cells pass the test. After these tests, a complete charge, discharge, cycle is performed. Then the capacity is measured.

Charge Cycling Five charge/discharge cycles will be performed to each cell. Current, voltage and temperature will be measured throughout the cycles and logged for post-test analysis. After the charge cycles, the capacity is compared to the nominal capacity provided by the manufacturer.

Internal Resistance and Voltage Drop Each cell internal resistance and voltage drop is measured again at room temperature. If there is a considerable difference from the previous measurement, the cell is discarded.

Qualification Testing of Battery Cells

The purpose of these tests is to qualify the batteries for space travel. All cells must undergo acceptance testing before the qualification phase. Eight random cells are chosen from all cells that passed the acceptance testing. From those cells, four of them are used during abuse bench tests. The other four are used for vibration, vacuum and thermal qualification tests. The procedure proposed is based on [63]. The electrical tests will be conducted in a hardware room at Taguspark, a campus of our University. The vibration and vacuum tests will be conducted at Active Space.

Physical and Electrochemical Characteristics This test will check for visual deformations such as scrapes, dents and bulges. Then each cell is measured for their physical properties such as length,

width, height and mass. Each cell is also measured in their electrochemical characteristics such as OCV and CCV (Closed Circuit Voltage).

Charge Cycling Three charge/discharge cycles will be performed in the battery bank. Current, voltage and temperature will be measured throughout the cycles and logged for post-test analysis. After the charge cycles, the capacity is compared to the nominal capacity provided by the manufacturer.

Cell Over-charge Charging will be conducted at 1 C and 10 V. The current and voltage will be measured during the test. Each cell has an overcharge protection of around 4.275 V, so it's expected that the bank voltage will not exceed 8.55 V. After the test, a complete discharge and charge cycle is performed. Then the capacity is measured.

Cell Over-discharge Discharging will be conducted at 1 C. The current, voltage and temperature will be measured during the test. Each cell has an over-discharge protection of around 2.3 V, so it is expected that the bank voltage will not be lower than 4.6 V. After the test, a complete charge, discharge, charge cycle is performed. Then the capacity is measured.

External Short The battery will be externally shorted by connecting its terminals. The current, voltage and temperature will be measured during the test. As shown in Table 5.2, each cell has an over-current protection 2 A to 4 A, so it's expected that the cells will not exceed this value. The short is maintained during three hours. After this test, a complete charge, discharge, cycle is performed. Then the capacity is measured.

EPS internal battery protection The EPS board has an over-current and over-voltage protection that will be activated before the battery protection. Both will be tested.

Vibration qualification These tests will be conducted in Active Space. It will consist in a resonance search, sine vibration, resonance search, random vibration and in another resonance search. The test specification is the same as in the system qualification, the worst case of the FYS Design Specification, because the launcher is yet to be defined. Accelerometers will be added to the MGSE to obtain more independent measurements. After these tests, a complete charge, discharge, cycle is performed. Then the capacity is measured.

Vacuum and Thermal Extremes The battery bank physical characteristics (scrapes, dents, bulges, length, width, height and mass) are measured before and after the vacuum test. If they do not change, and the OCV do not change, the battery passes this test. Then the same test is repeated at the minimum and maximum temperature expected in space. After these tests, a complete charge, discharge, cycle is performed. Then the capacity is measured.

5.3.5 ADS-B antenna

This antenna was designed by the ISTsat-1 team and will be tested for directivity in ANACOM's anechoic chamber. The plan is to place the antenna directed outwards of a side of a rotating cube. The power input will start high as the antenna permits to see the shape of the radiation patterns. Measurements will be made in each degree that the cube rotates. Then, after a full lap, the power input will go down, to

the minimum that the sensors permit, and another lap will be done. The test will end when the radiation pattern is identified.

5.3.6 U/V antennas

The team will test them for directivity, with the same process described for the ADS-B antenna. They are bought COTS products, which are qualified by the manufacturer to deploy three times. Our antenna will be deployed on Earth at ANACOM and ESA anechoic chambers, with the final deployment taking place in Space. The first run will take place before any mechanical or thermal tests with the PFM. The second run will take place after mechanical and thermal tests at ESA.

5.3.7 ADCS calibration

Calibration and characterization of particle instruments with supporting flight electronics is necessary for the correct interpretation of the returned data. Ideally, the instrument should be calibrated before flight with particle sources replicating the conditions in space as closely as possible. This calibration will be performed at IST's facilities, with the help of a Helmholtz coil and an air bearing system. The coil serves to simulate the Earth magnetic field and the air bearing system will provide an almost frictionless environment regarding spinning on an axis. Since this calibration is made at subsystem level, only the OBC PCB is used. This means that sun sensors and magnetorquer, which are incorporated into the solar panels, are not used at this moment.

Start-up The OBC board is powered up and the operator waits until it is on normal operating mode. Since both the gyroscope and accelerometer start up time are less than one second, no warm-up time is required. Each test described shall be performed when temperature has stabilized because bias measurement is temperature dependent.

Gyroscope The OBC board is rotated by hand and then it is kept at rest for at least 10 seconds. If the measured angle is not constant, there is a bias in the measurement and it shall be corrected. The same process is repeated multiple times to confirm the elimination of the bias. Then, the same process is repeated various times with the change that, every time there is a bias measurement, the sensor is restarted. The operator waits at least one second to make another measurement with each restart. Then, the process is repeated for the two remaining axis.

Accelerometer The OBC board is rotated by hand and then it is kept at rest for at least 10 seconds. If the measured acceleration is not null, there is a bias in the measurement and it shall be corrected. The same process is repeated multiple times to confirm the elimination of the bias. Then, the same process is repeated various times with the change that, every time there is a bias measurement, the sensor is restarted. The operator waits at least one second to make another measurement with each restart. Then, the process is repeated for the two remaining axis.

Magnetometer The OBC board is rotated randomly in all axis at the same time and points are collected. If the output is a sphere, centred in the coordinate origin, the scale factor is calibrated. If it is

an ellipsoid, calibration shall be applied. Then, it is put inside a Helmholtz coil with a constant magnetic field. By turning the board in different axis, the presence of bias is checked and corrected.

Static test The OBC is kept still over a day and attitude data is gathered. This will show the how the bias varies over time.

Algorithm Testing the attitude determination algorithm and building the Helmholtz coil will enable validation of future control algorithms. In this phase, the team builds three coils with around the same maximum magnetic dipole as the solar panel magnetorquer. They are placed in the same position in the -X, +Y and +Z face of a standard 1U CubeSat. Besides the magnetorquer, the OBC board is also placed inside the structure. Then, the test subject is placed inside of a Helmholtz coil on top of an air bearing system. A command that makes the test coils induce a magnetic force is sent to the ADCS board. It is verified if the behaviour is correct. Then the test subject is turned around in all axis and with various inclination angles so that the correct behaviour is evaluated. To test the de-tumbling behaviour, an operator pushes an edge of the test subject that puts it spinning. Then, a command for de-tumbling is sent to the ADCS and its behaviour is observed.

5.3.8 Flat-sat

Consists in connecting the various sub-systems in a “flat-sat” configuration and having stubs going from it to a computer. They will tell us everything that is happening in the S/C. Then the team can start to send command and see how it will react. The team is currently performing such integration tests, with set-ups as in Figure 5.1. The team developed the flat-sat board where the subsystems are placed on. From the board, one visually see each subsystem operational mode, the connected subsystems and provide a direct access to the PCB and PC104 pins.

5.3.9 Other subsystem verification

Other subsystems shall be verified individually, by terms of hardware and software. Since the team is divided by subsystems into sub-teams, and each one of them designs and manufactures theirs own hardware, they will also test it. On software related issues, the team has a platform which compiles and performs integration tests when a subsystem sends their programming code there.

5.4 Verification on System Level

This test program will happen when the S/C is integrated and passed all previous subsystem level tests, both in the EM and PFM. In this thesis, various verification methods such as physical properties analysis and ADCS calibration will be detailed. Tests such as the full functional, reduced functional, mission and end-to-end test will be detailed. Environmental tests including mechanical, thermal and ECM tests will also be aborded.

5.4.1 Physical Properties

Mass, dimensions, centre of gravity and moments of inertia of the S/C shall be measured or computed to validate their compliance with the launch interface and mechanical requirements for CubeSats. In the FYS program, such verification is by inspection and review. The inspection is filled by hand on a template, becoming the as-run procedure in the final inspection report.

5.4.2 ADCS Characterization

The magnetorquer used are incorporated in the solar panels. Since that is a critical element of the S/C regarding cleanliness of the surrounding environment, these tests are to be done at INESC's clean room.

Sun-sensor The sun sensor is placed at a predetermined distance and angle from a light source in a dark room. Then the S/C is rotated from -70º to 70º, with 10 degrees of interval per measurement, because the solar panel has a sun-sensor with an angle of half sensitivity of $\pm$ 60º. The process is repeated for the other axis that the sensor is capable of measuring. Then, the remaining sun-sensors are characterized with the same process. Finally, the S/C is hold by the hand of an operator and he turns it in various positions. The EGSE that is connected to the S/C outputs the sun vector and correct functioning is evaluated.

Polarization evaluation This test will make sure that both the low and high-resolution magnetometers are properly orientated. To make sure that that is the case, a Helmholtz coil will be used because it creates a nearly uniform magnetic field in one direction. Then, the process is repeated for the two remaining orthogonal axis.

Mean induced magnetic field To check for the mean magnetic field induced by the S/C we use the Helmholtz coils. The first step is to measure the magnetic field of the centre of the coils without the satellite being present. To do this, a high precision and calibrated compass is needed. In the second step, the S/C is placed between the coils and magnetometer data is collected. The process is repeated several times, and in each axis. This will get the ratio between the real and the measured magnetic field, with the second one being influenced by the rest of the S/C. With this ratio, a calibration curve is set for each magnetometer and the whole process is repeated to check for a good calibration.

Magnetorquer response The S/C is an air bearing system capable of spinning on its axis, with its geometric centre in the centre of the Helmholtz coils. Then, the EGSE shall send commands to the ADCS that makes the magnetorquer induce a magnetic force in the axis influenced by the coils. The correct behaviour is verified. Then the S/C is turned to the remaining two axis and the same process is done. As a backup plan, in case the magnetorquer are not strong enough to force a different attitude due to friction, a compass is used to check the magnetorquer polarity after different attitude commands.

De-tumbling The S/C is set-up in the same manner of previous test. Then an operator pushes an edge of the S/C that puts it spinning. Then, the EGSE shall send a de tumbling command to the ADCS and its behaviour is observed.

5.4.3 Full Functional Test

The Full Functional Test (FFT) proves a set of requirements made by the ISTsat-1 and FYS team. Such requirements are chosen based on the test adequacy to a fully assembled and integrated S/C, and at ambient conditions. In the ISTsat-1 team, it culminated in a Test Specification and Test Procedure (TSTP) for the FFT. It provides a list of the requirements that a step-by-step procedure will prove and how the test will be made: by who, where, when and which materials and equipment is needed. The document can be requested to the ISTsat-1 team, with the reference present in [64].

Requirement verification

The first task was to comb through 375 requirements and choose the appropriate ones for the FFT. This number turned out to be 110 requirements. In order to facilitate corresponding the requirement to the step, a spreadsheet was built. There, the author writes a step-by-step of the test procedure, with the approach that the operator does not know how to operate the CubeSat. This provides a more clear step-by-step procedure, which reduces errors and provides a repeatable test procedure.

The author writes the step-by-step procedure and the reason why it made that step, with the reason being the requirement identification. Then, the spreadsheet automatically performs a proven/not proven check for the requirements and corresponds the step number for each proven requirement. This is very useful because it makes procedure changes fast and easy, with automatic step linking. For smaller TSTPs this spreadsheet would not be necessary but, since the FTT has over 900 small steps, it proves essential. A sample of the Requirement Matrix for the FFT can be see in Table C.1.

Test requirements and organization

The S/C shall be inside of INESC's clean room during the testing procedure. There shall be at least two operators and a PA (Product Assurance) operator in the test room. One operator shall know the S/C software architecture, including all operating modes and transients and possible errors sources. The other shall know how to operate the GS and all operation commands. The PA shall observe the procedure and check if the S/C passes each test. The operators shall use ESD wrist bands with the same ground as the S/C and clean room equipment such as latex gloves, shoe covers, safety glasses, hairnet and hood.

This test shall be performed during the ambient test campaign and after the environmental test campaign, as a way of testing against mechanical degradation. It shall happen in the order of the step-by-step procedure, which may take one to two weeks to complete, depending on several factors such as operators, PA, facility and equipment availability.

Test description and set-up

The S/C shall be in the Proto-flight hardware and software configuration design in both times, with the exception of the deployable antennas. These shall be dummies and deployed before the test procedure. The S/C shall be in a clean room and held in place by a MGSE as in Figure 5.5. The MGSE shall be grounded with the operators and the ESD protected table. It's -Z face shall be in direct line-of-sight to the device emitting the simulated ADS-B signals and the roller switch shall not be in contact with the MGSE

(+Y face up). The RBF pin shall be inserted into the S/C respective slot and the deployment switches shall be pressed with tape.

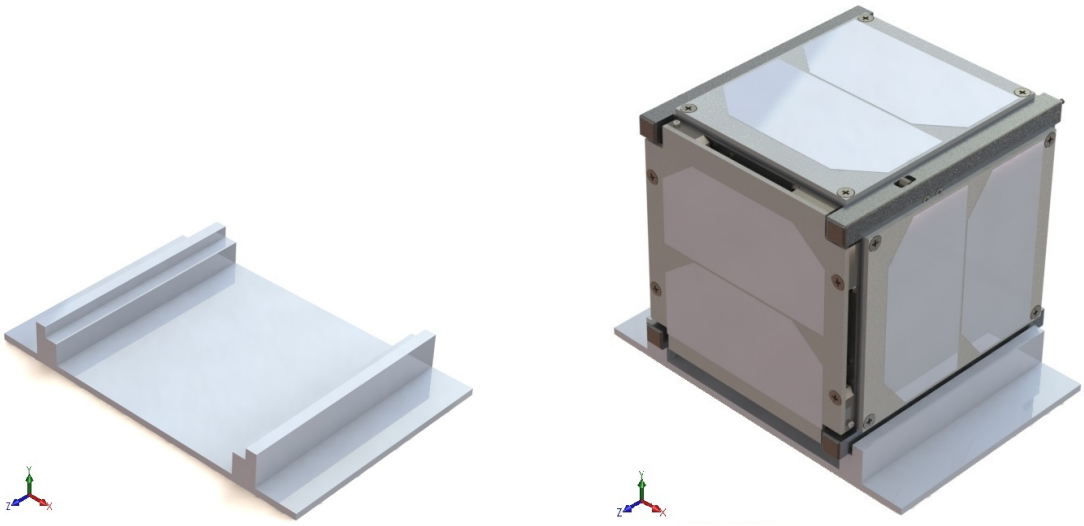

(a) MGSE standalone. (b) MGSE with S/C.

Figure 5.5: Conceptual MGSE for the ISTsat-1 functional tests on system level.

Test facility and required equipment

Testing will take place in INESC clean room. The +X face service connector is needed to connect the S/C to the computer. It powers the S/C, provides wired communications and records and displays the I^2C signals from the main bus. The computer sends messages directly to the OBC trough the service connector, simulates the ADS-B signals and the Ground Station commands. To perform wireless communications, it shall be connected to two radio emitters in the respective CubeSat frequencies and with the lowest amount of gain possible as to not disturb other listeners. Another radio will be needed to receive the beacon. The computer shall have the GS final software and a simulation of ADS-B signals ready to run with scripts. To perform a flash test to the solar panels, a 60 cm by 60 cm by 60 cm card-board box and a 30 W led lamp will be needed.

Step-by-step procedure

The step-by-step procedure will be used and filled-in as appropriate during the execution of the tests and becomes part of the Test Report as the “as-run” procedure. Any special events occurring during the test shall be reported. The procedure shall be filled in manually during testing, from the “Actual Result” column to the “PA signature” column, as in Table C.2.

The following step-by-step functional tests were devised: operational and transient modes, cold and warm restart, deployment switches and respective timer, crash recovery in each subsystem, flash test on solar cells, GS to S/C communications with normal and redundant subsystems, GS to S/C data rate with different encoding/decoding and transmission power, update time reference, battery charging/discharging, battery level and respective operational mode, turn on with low power, housekeeping data handling and storage, thermal cycling software, autonomous S/C diagnostics with error reporting, commanded diagnostics of individual subsystems with error simulation and ADS-B message handling

with various filters. At the end on the procedure, the S/C is restored to a pre-flight configuration, to avoid surprises when it is turned back on.

Table C.2 shows a sample of that list with detailed instructions, including expected results and pass/fail criteria. Due to the size reserved for the hand fill-in and the number of steps needed to verify over one hundred requirements, this table has over one hundred pages in the original document. Since it is impossible to fit that table in this thesis and the FYS requirements are only for internal team use, solely a sample was listed.

5.4.4 Reduced Functional Test

The RFT is quick test, taking no more than 10 minutes, with steps taken from the FFT. They will be performed between transports, mechanical or thermal tests and long storage periods, and for pre-flight functionality tests. Visual verification if firstly performed, checking against damage in the rails, solar panels, ADS-B antenna and U/V antenna deployment mechanism and loose fasteners. Then, the RFT (or health check) is performed.

Up to this moment, such tests depends on the making of an interface program and a dedicated PCB. The S/C will be connected to the PCB through the +X service connector, and then to a computer. Firstly, the program shall detect the S/C through the interface program. Then, the operator shall click on a ”Start RFT” button, inside of the program and it shall run automatically. If errors are detected, the team will take necessary actions. Otherwise, testing proceeds or the S/C is packed, depending on the future procedure taking place. In the second case, the S/C is packed into the MGSE for vibration/storage as in Figure 5.6 or into the deployer, depending on the mission phase.

More details on the S/C packing/unpacking into the MGSE or deployer and RFT procedure for pre-flight maintenance are consolidated in the IST-sat1 User Manual. The document can be requested to the team, with the reference present in [65].

5.4.5 Mission Test

The Mission Test is another approach of S/C testing. It differs from the FFT because this is a mission-oriented test. This means that there are no requirements proven, and the S/C will be tested according to the expected mission timeline, including failure scenarios. Alike the FFT, it culminates in a TSTP for the mission test. The document can be requested to the ISTsat-1 team, with the reference present in [66].

Test requirements and organization

The S/C shall be inside of INESC’s clean room during the testing procedure. There shall be at least two operators and a PA (Product Assurance) operator in the test room. One operator shall know the S/C software architecture, including all operating modes and transients and possible errors sources. The other shall know how to operate the GS and all operation commands. The PA shall observe the procedure and check if the S/C passes each test. The operators shall use ESD wrist bands with the same ground as the S/C and clean room equipment such as latex gloves, shoe covers, safety glasses, hairnet and hood.

This test shall be performed during the ambient test campaign. It shall happen in the order of the step-by-step procedure, which may take one to two weeks to complete, depending on several factors such as operators, PA, facility and equipment availability. The S/C shall be turned uninterruptedly on during the test procedure. It shall happen after a successful FFT and in the order of the respective step-by-step procedure.

Test description and test set-up

The S/C shall be in the Proto-flight hardware and software configuration design in both times, with the exception of the deployable antennas. These shall be dummies and deployed before the test procedure. The S/C shall be in a clean room and held in place by a MGSE as in Figure 5.5. The MGSE shall be grounded with the operators and the ESD protected table. It's -Z face shall be in direct line-of-sight to the device emitting the simulated ADS-B signals and the roller switch shall not be in contact with the MGSE (+Y face up). The RBF pin shall be inserted into the S/C respective slot and the deployment switches shall be pressed with tape. The battery state of charge shall be under 30%. The computer is connected to the +X service port of the S/C to charge the batteries and sniff the main I^2C bus. Communication will only be possible with wireless communications through the U/V antennas. All commands sent and telemetries received will come from this way of communication.

Test facilities and required equipment

Testing will take place in INESC clean room. A computer will be needed to simulate the ADS-B signals and the GS commands. It shall be connected to two radio emitters in the respective frequencies and with the lowest amount of gain possible as to not disturb other listeners. Another radio will be need to receive both the beacon and S/C responses. The GS emitter radio shall be turned off when there is no commands being sent to the S/C. During the orbit cycling, it shall not be turned on more than five consecutive minutes for each orbit, except when said otherwise. The computer shall have the GS final software and a simulation of ADS-B signals ready to run. The emitted signals shall only simulate aircraft in the S/C path and expected ADS-B range. Only one simulation is needed and it shall be repeated each 92 minutes. It shall have its end-point coordinates above our University. A compass is needed to check if the magnetorquers are working.

To simulate the day-to-night transition, and vice-versa, a 60 cm by 60 cm by 60 cm card-board box and a 30W led lamp will be needed. Since this lamp cannot power the S/C, the +X service port will be connected from the S/C to the computer. The lamp will be turned on during 56 minutes and turned off during 36 minutes, each cycle. When the lamp is ON, the computer will charge the S/C through the service port and, when the lamp is OFF, it will not charge the S/C. After the RBF is removed, the lamp cycles shall run automatically until the end of the test or when it is explicitly said otherwise.

Step-by-step procedure

The step-by-step procedure for this test follows the same approach of the FFT. The mission tests devised use some of the FFT steps, such as operational and transient modes, crash recovery, communications, low power, housekeeping data handling and storage and ADS-B message handling and filtering. The difference between these tests in the FFT and in the mission test is that, the latter, uses the timing

relative to the orbit time. This means that the S/C will have to wait to ”pass over the GS” to downlink its data and receive new commands, all by using wireless communication. Even though the S/C is connected to a computer to charge it and the operator can check on the S/C status by looking at its data bus, having to wait for the tele-command windows provide a more suitable environment for error accumulation.

With the same ADS-B signals repeated each orbit, the application of ADS-B filters in the S/C provides a reliable comparison between the cycles. All types of filters are applied, alone or in multiples, such as no filter applied, by aircraft, area, altitude and speed. Filters of ADS-B signals were also tested in the FFT, but not at the scale of the mission test procedure. Since the S/C is kept uninterruptedly on for the test duration, it simulates as close as possible the data management in the real mission.

There is a step in the procedure where the GS is turned off for 24 hours, to see how will the S/C behave. In principle, the ADS-B will run out of memory first and then the S/C will go into Safe Mode due to the lack of communications with the GS. There is also a step where the S/C keeps receiving the ADS-B signals, downlinking its data, receiving its tele-commands but charging is disabled, simulating solar panel or EPS failure. The S/C behaviour is checked until it shuts-down due to the lack of power. When the S/C shuts-down due to lack of power, the beacon continues to emit signals until the battery is completed depleted. This step will also make sure that the beacon works in this extreme situation and would provide, in the actual mission, a possible solution or the failure cause. Then, charging is enabled and the team waits for the S/C diagnosis and restoration of communications. After the S/C powers on, another set of orbit cycles is performed to check if the S/C can restore it’s mission. At the end on the procedure, the S/C is restored to a pre-flight configuration, to avoid surprises when it is turned back on.

The step-by-step has over five hundred entries that culminate in a sixty page procedure. This means that it is not possible to fit the procedure in this thesis. The document can be requested to the ISTsat-1 team, with the reference present in [66].

5.4.6 End-to-end Test

Normally, the end-to-end test would be done in an anechoic chamber but, in the CubeSat case, by separating the two systems by some distance and still being able to communicate correctly, can be considered a good way to validate them. This test is typically done after the mission test. Since the latter helps writing operational procedures for the GS, now the procedures are tested in detail. This test will consist in two phases, the first where the S/C is in the same building as the GS. The second phase has the S/C at a few kilometres distance from the GS, in it’s line-of-sight. If there is a good connection, the system is proven to communicate correctly.

5.4.7 Mechanical Testing

Mechanical testing involves resonance searches, quasi-static loads, sine vibration, random vibration and shock tests. All mechanical testing will be performed at Active Space when it is the EM, and at ESA when it is the PFM. These tests are dependent on the chosen LV and deployer, which is not known at

the moment. This means that the vibration test levels defined in this document are recommended by the FYS design specification or by the Falcon 9 LV from SpaceX [51, 67]. For comparison between the most common LV check [68].

The test set-up for all mechanical testing is the same. The CubeSat is placed in a shaker as in Figure 2.1, inside of a metal casing. The shaker has built in accelerometers but, in order to have a more reliable test, accelerometers will be placed inside and outside of the casing. Typically, a shaker performs vibration in all three orthogonal axis without having to turn the S/C. The test procedure will go axis by axis in the following order: resonance search, quasi-static load, resonance search, sine vibration, resonance search, random vibration, resonance search.

In the EM, the casing (or MGSE) will be built by the team and a conceptual design is shown in Figure 5.6. Note that the design permits access to the +X and -Z service port without having to disassemble the whole MGSE. It is also possible to remove only one face of the MGSE, making its packing/unpacking procedure easier. More details about this procedure can be requested to the ISTsat-1 team, with document reference present in [65]. In the PFM, testing is performed at ESA, inside of a mock-up deployer model.

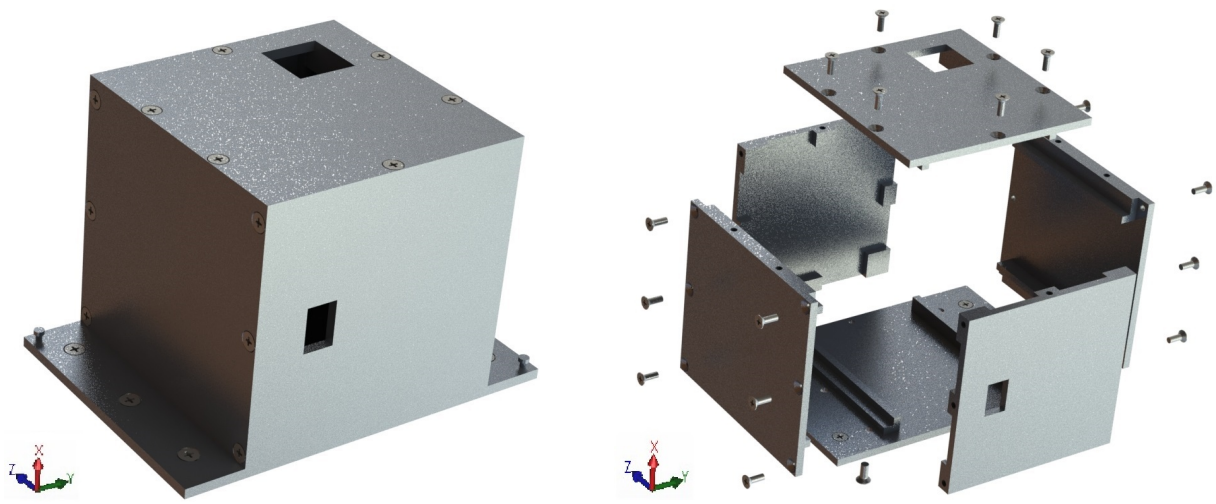

(a) Closed view. (b) Exploded view.

Figure 5.6: Proposed MGSE for EM vibration testing, for storage and transport.

Resonance Search In both models, the first mode on the resonance search shall be more than 100 Hz. LV typically present their fundamental frequency in that range, and by limiting the first mode on the CubeSat, dynamic coupling between the two systems is prevented [68]. From computer simulations, the first mode of the ISTsat-1 CubeSat is around 190 Hz. This test will verify the simulation and, when performed between other vibrational tests, verify the S/C integrity. To compare against random vibration tests, the resonance search will be performed until 2000 Hz is reached, at a low intensity of 0.5 g to prevent damaging the structure and at 2 octaves/minute. Where each octave is frequency doubling (e.g. 1 oct/min means that the frequency doubles per minute).

Quasi-static Load There are three quasi-static load levels defined by the FYS design specification [51], which differ on the launcher and from 8.34 g to 18.1 g. Until there is confirmation on the launcher,

the 18.1 g level is the proposed. Such acceleration is multiplied by 1.25 at the qualification level, reaching 22.6 g [44]. This test is performed with a constant frequency, one third from the fundamental resonance frequency. Since the resonance search is performed before this test, such frequency is known, and it is the one that shall be used. The amplitude of the sine wave will go from close to zero, to the maximum, to zero again, linearly and in approximately one second.

Sine Vibration Test On the EM, the sine is swept at 2 oct/min, from 5 Hz to 100 Hz, and with a 1.25 qualification factor applied on top of the expected sine environment. For the PFM, the sine is swept at 4 oct/min, from 5 Hz to 100 Hz, and at the expected sine environment [44]. If the LV would be Falcon 9, the test profile regarding frequency would be as the one present in Table 5.3. Note that the Falcon 9 axial sine environment is more intense than the lateral sine environment, in the range considered, so the axial profile was the one chosen. The test is stopped if there is a +3 dB difference between the expected and obtained vibration values.

Table 5.3: Sinusoidal test profile on frequency for Falcon 9 [67].

Frequency (Hz)	**Acceleration (g)**	
	EM	PFM
5	0.63	0.50
20	1.00	0.80
30	1.00	0.80
31	0.75	0.60
75	0.75	0.60
85	1.13	0.90
100	1.13	0.90

Random Vibration Test The random vibration test levels are defined in the FYS design specification [51]. They will be described knowing that they may be subject to change, according to the chosen LV. The test profile obtained is depicted in Figure 5.7. The profile root-mean-square acceleration is of 9.47 g. Both for the EM and PFM, a +3 dB margin was added. The difference between the two models is the the EM takes two minutes to go over all of those frequencies, while the PFM takes only one minute [44]. The test is stopped if there is a +3 dB difference between the expected and obtained vibration values.

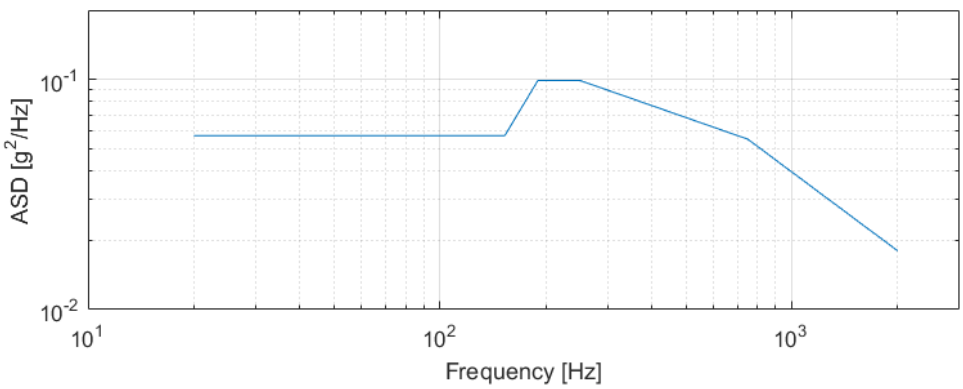

Figure 5.7: Random vibration test profile according to [51].

Shock Load Test Shock load tests are not applicable if other mechanical tests provide a more intense test profile. If it is deemed necessary, the EM would have to go through two shock tests per orthogonal axis and the PFM would have to go through one shock test per axis. The frequency and acceleration imposed to the S/C depend on the LV. If it were the Falcon 9, for 100 Hz implies 30 g of acceleration and for 1000 Hz and 10000 Hz it would be 1000 g of acceleration [67].

5.4.8 Thermal Testing

Thermal testing will be performed to verirify if the CubeSat survives the expected space condition, both the vacuum and temperature ranges. This type of testing also ensures a proper out-gassing of the S/C components. It is composed of bake-out and thermal vacuum cycling.

Bake-out This test is performed in a vacuum environment to ensure proper out-gassing of components and its test specification is dependant on the launch provider. The S/C is turned off during this test, and temperature is recorded using thermocouples. This procedure will happened when the satellite is fully integrated and in the first cycle of the TVC. It is performed at Active Space and ESA's facilities.

As an initial approach, the bake-out levels are 60ºC during 6 hours, with a temperature change rate of 5ºC per minute, both when increasing and decreasing the temperature. The chosen temperature is the minimum hot non-operational temperature defined in [51]. Per [69], the the dwell time after thermal stabilization is 6 hours for 60ºC and 3 hours for 70ºC. The first approach was chosen to reduce battery degradation.

Thermal Vacuum Cycling Thermal vacuum cycling test will place the S/C close to space conditions, while it is operational. Functionality in vacuum and at the range of expected temperatures in space is verified. The test is performed at Active Space and ESA's facilities, depending if it is the EM or PFM, respectively.

A computer is connected by a cable to the S/C while it is inside of the thermal vacuum chamber, which is used for data logging, functional assessment and charging. To have a good idea on the temperature inside of the S/C, four thermocouples will be installed inside of the S/C, in the EPS, battery and the remaining two in contact with the S/C rails. An example of the test set-up is shown in Figure 2.2. Firstly a RFT is performed to check is all subsystems are functioning and communication is possible. Afterwards, the S/C is shut down, a vacuum of 10^{-5} mbar is imposed and the temperature increases to perform the bake-out. Then, the S/C temperature goes to the minimum test temperature and a "cold start" is performed. After, thermal cycling is carried out seven times for the EM, and 3 times for the PFM [44]. In each cycle, at least a RFT is performed for each maximum and minimum temperature. When all cycles are done, the pressure and temperature return to ambient conditions and a RFT is performed.

Qualification and Proto-flight test levels and duration of space segment equipment regarding thermal vacuum are defined in [44]. For an added margin, in both cases, the maximum test temperature is 5ºC more than the maximum non-operational temperature and the minimum temperature is 5ºC less than the minimum non-operational temperature. The maximum and minimum operational temperature for each subsystem is limited, in both sides, by the battery. Such temperature is 60ºC and -20ºC, respectively.

For the added margin, the maximum and minimum test temperature are 65ºC and -25ºC, respectively.

The temperature rate will be 5ºC/min because it complies with “The temperature rate of change shall be lower than 20 K per minute” [44], and Active space’s facilities have a maximum temperature change rate of that same value. A preliminary thermal qualification and proto-flight test profile is shown in Figure 5.8 and Figure 5.9, respectively.

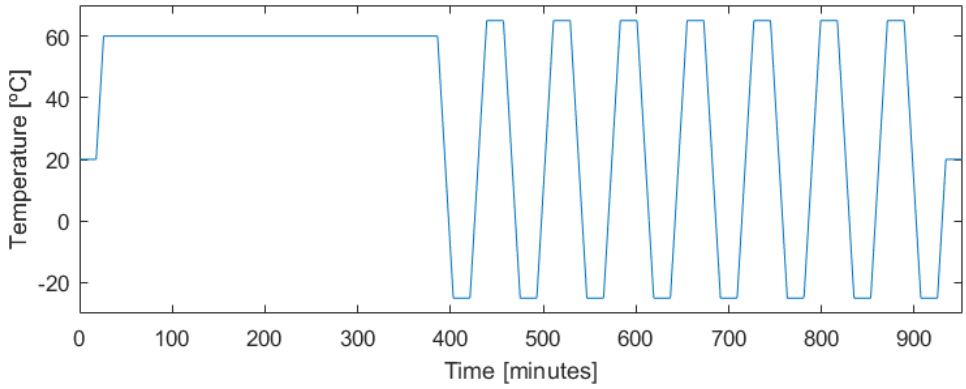

Figure 5.8: Preliminary thermal qualification test profile.

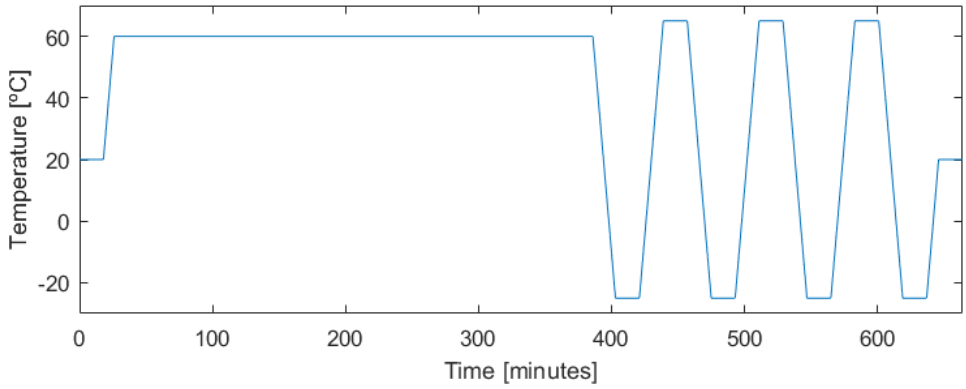

Figure 5.9: Preliminary thermal Proto-flight test profile.

5.4.9 EMC Test

This test will take place at ANACOM and ESA’s anechoic chamber. It will be performed in the PFM, before and after the environmental tests at ESA. The antenna deployment mechanism will be tested in the anechoic chamber, before the each EMC test. Due to the mandatory no operation of the CubeSats from launch until 30 minutes after separation, only auto-compatibility is of concern [68]. The test for intra-system EMC is performed in an anechoic chamber where the radio frequency link is measured and each of the subsystems is monitored. During the test, the emissions of the S/C are recorded. The obtained data is cross-related to understand the origin of any non-conform behaviour.

Chapter 6

Assembly and Integration Procedure

This chapter describes the assembling procedure of the ISTsat-1 PFM, and the integration testing necessary to understand if all subsystems or components are properly assembled. A general overview of all the ISTsat-1 CubeSat can be seen in Figure A.1. The difference from the PFM to the EM is that, in the later, the solar panels and U/V deployable antenna are not present. The AIP for that model skips steps related to the unused components.

6.1 Operators and set-up

The facility to be used in the assembly and integration procedure will be INESC clean room. All personnel that will work in the clean-room must undertake a training course with experienced team members. Only authorized personnel will be allowed inside the clean-room. The allowable temperature range is of 25ºC $\pm$ 5ºC and relative humidity of 50% $\pm$ 5%. They will always wear clean room related equipment such as ESD protections, shoe covers, coverall, hairnet, hood, safety glasses and gloves. Two operators are needed to assembly the S/C and one PA operator to check the progress of the assembly procedure.

The operators shall prepare two ESD protected mats on top of tables: one for the assembly process and another to hold GSE, tools, components and parts. The mats, operators and other used equipment shall be grounded to an electrical power outlet. All components or parts not used shall be stored so that they are safe from their surroundings. In particular, solar panels should be stored with the solar cells facing down, so that any falling objects would not fall directly on the fragile solar cells. Any object stored should be placed such that they cannot fall or roll. This is a particular concern for storing any objects on grid shelves. For ease in identifying the correct screws and other hardware used, it is necessary for them to be properly organized and labelled, since using the wrong screw could jeopardize the mission.

They shall check if all material from Table D.1 and Table D.2 is present, clean and pose no deformities. Cleanliness shall be kept for the whole project, including all components, parts, subsystems and models, with isopropyl alcohol, acetone or lint free wipes. Note that acetone shall only be used if the alcohol does not solve properly and when it is used, their residuals shall be removed using alcohol. The parts shall be visually checked, with special attention to inspections points such as PCBs (no bubbles,

no scratches, PC-104 connection pins strait, no bending), solar panels (no scratches, no bending, no cracks), hard anodized part of the structure (no scratches, no cracks, no discoloured/non-black spots), payload antenna (no scratches, no cracks) and U/V antenna (no scratches, not deployed).

All the tools and measurement equipment shall be calibrated previous to the assembly (e.g. torque wrench). When assembling the component, the tool used, such as a screwdriver or a pair of tweezers, should be held with both hands to reduce the risk of dropping it on the spacecraft. When assembling a component, such as a computer board for example, the screws holding the computer board should first be loosely fastened so that it is not subjected to unnecessary stress from assembly misalignment. Only when all screws are in place should they be tightened. Never leave any components resting on a structure without being fastened.

6.2 GSE, tools and consumables

Mechanical Ground Support Equipment is used to both facilitate the assembly of the spacecraft and protect it once it is assembled. The conceptual MGSE design for assembly aid can be seen in Figure 6.1. It provides a holding mechanism to insert the subsystems into the rods, in a fast and easy manner. Such MGSE is used until the +Y and -Y side frame are inserted and screwed in place. At that moment, the S/C is just placed on top of the ESD protected table. The MGSE used for the S/C protection after it is assembled was already aborded, and can be seen in Figure 5.6.

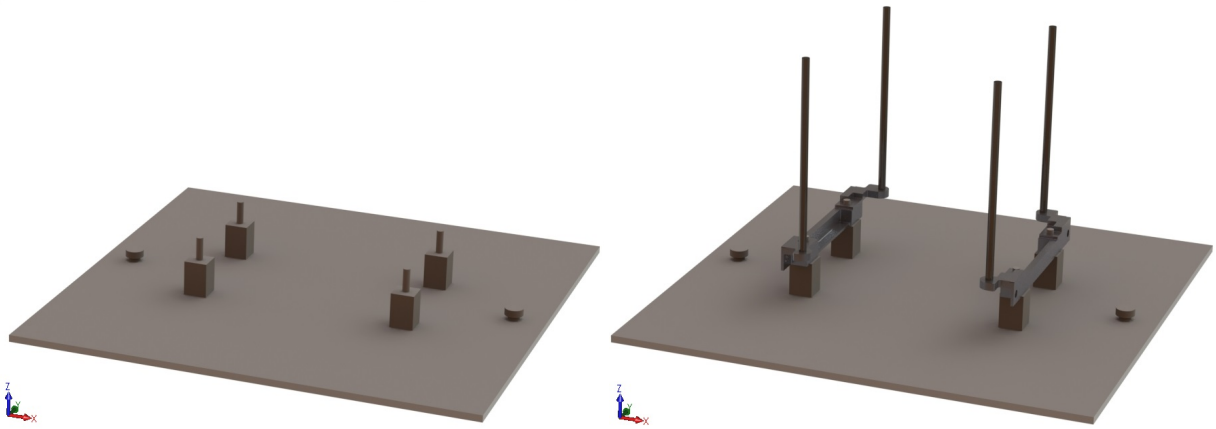

(a) MGSE standalone. (b) MGSE with rods and -Z ribs.

Figure 6.1: Conceptual MGSE to aid the ISTsat-1 assembly.

The remaining GSE, tools and consumables are detailed in Table D.1.

6.3 Components and parts

These components and parts are all flight capable, and compiled into a list for the PA to check before the assembly start. An overall view of the whole S/C can be seen in Figure A.1. Not present in that figure are the spacers between the subsystems, the RBF pin, thermocouples and the wiring necessary to connect solar panels, antennas, and others. All six different spacers dimensions were determined

through the 3D model of the CubeSat. The wiring connectors (from two to twelve pins or coaxial for the antennas) were discussed with the team members because the PCBs changed over time. The 20 wires needed between the connectors were optimized as to reduce the total length of wires in the CubeSat, and that was determined from the 3D model. Due to constraints in the assembly such as manoeuvre space for the operator hands and for visual checks of the connections, wiring length was added. The screw diameter was known but the optimal length was determined, based on the screw hole deepness. Spares such as wiring, connectors, screws and spacers were also added to the list of components and parts. A sample list can be seen in Table D.2. Details such as figures for the components and a column for the PA initials are not present in the sample table. For more details please check [70].

6.4 Step-by-step procedure

The step-by-step assembly procedure will follow the sequential diagram of Figure D.1. It is composed of over 140 steps, with figures and diagrams. This means that the procedure cannot be presented in this thesis. A description of the unknown steps will be presented, and the full procedure can be requested to the ISTsat-1 team in [70].

During the step-by-step assembly procedure, some procedures are done regularly. The humidity and temperature are checked and photos are taken to guarantee repeatability and provide a post-assembly error analysis. Errors observed during the assembly or extra unaccounted steps are logged in a reserved area of the AIP document.

All screws will be torqued with a specific torque. According to [71], the M2 torque for our bolt grade is 0.35 Nm and for the M3, the torque is 1.20 Nm. To make sure that they hold in place, glue will be applied to threaded part of the screw. One or two drops are applied, with the circular motion of the screw tightening, it will propagate to the whole screw and hole threads. For the M2x5 mm and M3x10 mm, only a drop of glue is used. For the M3x14 mm, two drops are used. The reasoning behind this difference is because the latter screw has a longer threaded part in contact with screw holes. The micro switches have two screws each, which will be screwed and tightened into place, directly with glue. The remaining screws will be screwed into place when necessary to hold parts, as a part of the assembly procedure. They will not be tightened and glue will not be used until all screws are in place. Then, one by one, screws are removed, glue is applied, and they are tightened. To even load distribution, the screws are chosen in a specific sequence.

The four thermocouples are fixated to the EPS bottom and top, and to the (-X,+Y) and (+X,-Y) sides of the side panels. Each one has a wire that comes out of the S/C, though the +X or -X Solar panel and the side panels. They are used in the TVC test, and then are cut from the outside, with the wires and thermocouples remaining inside of the S/C for the flight. To fixate the thermocouples, a layer of kapton tape is firstly applied to the surface where it will be fixed, to protect the equipment. Then, a thermocouple is placed on top of the tape and a thermal conductive glue is applied on top of the thermocouple. There is at least a fixation alternative. Instead of using the thermal conductive glue, it places the thermocouple between two layers of an acrylic-based kapton tape. This tape has a good thermal conductivity and also

ensures that the sensor is insulated from the rest of the S/C. Up to this moment, both options are being analysed with TVC experts at ESA.

The twenty connector wires needed to connect all components were detailed in Table D.2. Their location and wiring was detailed through the step-by-step procedure. Most of them go over the rods, in the direction that causes their length to be minimal. Each connector wire has multiple wires (2 to 8 wires) and two connectors. Each connector has a certain amount of pins. With the use of COTS solar panels, some connection points have more pins than the team needs. These connector wires have two connectors with twelve and five pins. The twelve pin connector is used on the solar panel but only five wires are needed, which makes the other end with five connection pins. The location of all connection points are sampled in Figure D.2 and Figure D.3, for the EPS and TTC, respectively. For the remaining components, please check [70]. The connection point in the EPS for the RBF pin can also be seen in Figure D.2. Before the solar panels are integrated, the RBF connection point shall simulate the presence of the RBF pin. This is useful to prevent any unintended S/C power-up. When integration tests are performed, this pin is removed. The RBF pin simulator is a shorted two pin connector wire.

As previously said, the +Z ribs holes where the rods go are not threaded and the -Z ribs holes are threaded. The -Z rod ends are threaded and have a flat head at the -Z tip. This mean that the rod height can and will be adjusted. This process will take place when all subsystems and structure parts are assembled. The operators will use a flat head screwdriver to perform that procedure. This process will make sure that the rods are tightly held in place.

During the assembly, integration procedures will also take place. Such procedures are composed of battery checks, EPS power verification, hearth beat waiting, visual checks, health checks, RFT, dimensional verification and a FFT. Battery checks verify their SoC and temperature. EPS power verification makes sure that the PC104 pins, relatively to the subsystems, are properly fed with the required voltage and amperage. The hearth beat wait will check the PC104 pins relative to the respective subsystem hearth beat. In the ISTsat-1 architecture, each subsystem has a PC104 pin that is high (3.3 V $\pm$ 0.4 V) or low (0.0 V $\pm$ 0.4 V). When the subsystem is working, the PC104 pin changes between high and low every fifteen minutes. When a subsystem is not working, the voltage state, high or low, will remain the same. Two different voltage measurements, with a multimeter, will take place twenty minutes apart, to check if all subsystems work properly. If an error is found, the procedure is halted until that is fixed. The health checks and RFT will take place during the integration, and the FFT after the S/C is fully assembled. We will not give mode detail about such tests because they were already aborded. Visual checks will take place before, during and after the assembly. The most important inspection points are solar panels (no scratches, no bending, no cracks), hard anodized part of the structure (no scratches, no cracks, no discoloured/non-black spots), payload antenna (no scratches, no cracks), U/V antenna (no scratches, not deployed). The dimensional verification is important to check if the S/C fits on the deployer. If the dimensions are exceeded, the root cause shall be analysed and, if possible, solve the problem (e.g. change the component for a spare part). If the problem is unsolvable, a NCR and/or RFW shall be presented to the FYS team.

After the assembly, integration and FFT procedures, the S/C is stored. The MGSE for storage was

already detailed and can be seen in Figure 5.6. The S/C integration into the MGSE is detailed in the User Manual [65].

6.5 Disassembly

Disassembly of the S/C, if needed, shall happen in a clean room and in the inverse order of the assembly process. Take in attention that no excessive force should be made. Depending on the reason for the disassembly, planning for the least intrusive disassembly procedure shall be constructed on a case-by-case analysis. Most connecting points are on the -X face so, for the most cases, the -X solar panel shall be firstly removed. Note that the connection wires have to be unplugged when removing antennas or solar panels, proceed with care. To ease the re-assembly process, the removed wires shall be labelled.

Screws that were locked in place with glue shall be heated before disassembly. To do that, the operator uses a soldering equipment to heat the screw head until he/she can remove it without excessive force. The removed screws shall be replaced when re-assembling the S/C.

Chapter 7

Conclusions

This thesis has three parts, related to the ISTsat-1 CubeSat. We analysed the status of compliance with international space debris mitigations policies. We planned the assembly, integration and verification plan, for the various development phases, both functionally and physically and at ambient and environmental conditions. We also planed the assembly and integration procedure. All parts were based on space industry standards and best practices performed by the CubeSat community.

Space debris measures are important because they reduce the probability of fragmentation, collision and hazardous re-entry events. The expected mission orbit was derived from the ISS's, which yielded a probable orbit time of around one year, making disposal manoeuvres not necessary. The CubeSat was analysed in regard of fragmentation and on-orbit collision risk, which outputted a negligible risk. The passivation of the CubeSat at the end of its mission is not necessary because the mission will end when it re-enters. The re-entry casualty risk was also accessed and, due the low CubeSat mass, it will disintegrate and pose no risk for the Human population. Up to this moment, an explosion risk may be caused by the custom-made batteries. The mitigation plan is to test them extensively, as described in the AIV plan.

The AIV plan was described in detail, and it includes verification on component, subsystem and system level, both functionally and physically, at ambient and environmental test conditions. It describes when, where and how the verifications take place. On subsystem level, the soldering and application of conformal coating to PCBs was discussed. A successful verification of structure anodization requires equipment not available and not in the scope of CubeSat missions, so that was not specified. The battery testing was approached and detailed as it was important for the CubeSat timeline and space debris mitigation requirements. A manned mission approach was performed for battery acceptance, in conjunction to a qualification procedure from a past CubeSat mission. The ADCS calibration, antennas characterization and flat-sat verification methods were also mentioned.

On system level, the AIV plan started with physical characteristics measurements and ADCS re-calibration. Then, the FFT and Mission test were detailed. Their outcome is hundreds of step-by-step procedures, on how each test shall be performed. They are important for any mission because they find deviation from the requirements and the expected mission timeline, both in normal mode and contin-

gency situations. Several verifications were devised, with a starting point of team-made preliminary test procedures, and its merge, update and expansion. The end-to-end test, where the S/C communicates with the GS, was also mentioned. All of these verifications were on ambient test conditions. To test the S/C, it is necessary to simulate the launch environment and the vacuum and thermal environment of Space. The launch is simulated by subjecting the CubeSat to vibrations, whose test levels depend on the launch vehicle. Since it is still unknown, these tests were not detailed. On the other hand, the thermal environment was detailed as it depends on the lower and upper end of the operational temperature of each component and the expected orbit. Finally, the EMC test with the antenna deployment test was also mentioned.

The AIP described the process of setting up the room, all the tools, parts and equipment necessary to assemble the CubeSat, and the respective assembly and integration testing. During the mission timeline, the structure changed and the AIP changed with it. The design changes were companioned with inputs from us, as they impact the assembly procedure. Also, wiring and routing, thermocouple fixing and torque order and intensity were detailed.

7.1 Future Work

The future work for the space debris mitigation compliance is dependant of the battery testing results. The remaining situations are compliant.

In regards of the AIV and AIP, the situation is different. Due to the mission timeline, the verifications and assembly described were planned but not implemented. Without the hands-on experience, the procedures may need unforeseen materials, equipments or verification steps. Also, since the CubeSat design is changing, some procedures may have to be changed. Some team requirements use terminology that was altered, so they shall be updated.

Since this an ESA backed program, plans have to be approved before they can be executed. This applies to all procedures, including electrical and mechanical ground support equipment. In particular, the MGSE for storage, battery qualification and assembly shall be approved and manufactured. The service port wiring for the +X and -Z faces shall be also manufactured and tested. The software for the computer that will communicate with the S/C also has to be developed.

For the functional tests, more contingency situations and debug commands shall be added. The test levels for the vibration tests shall be defined when the launcher is known. Also, the environmental tests shall be detailed in step-by-step procedures.

Bibliography

[1] Zachary Decker and Kerri Cahoy. A Systems-Engineering Assessment of Multiple CubeSat Build Approaches. Master's thesis, Massachusetts Institute of Technology, 2016.

[2] *KickSat : A Crowd-Funded Mission To Demonstrate The World's Smallest Spacecraft*, 2013.

[3] NASA. ISS Facts and Figures. `https://www.nasa.gov/feature/facts-and-figures`, 2018. [Online; accessed 9-May-2018].

[4] S. Gao, K. Clark, M. Unwin, J. Zackrisson, W. A. Shiroma, J. M. Akagi, K. Maynard, P. Garner, L. Boccia, G. Amendola, G. Massa, C. Underwood, M. Brenchley, M. Pointer, and M. N. Sweeting. Antennas for modern small satellites. *IEEE Antennas Propagation Magazine*, 2009.

[5] Erik Kulu. What is a CubeSat & other picosatellites. `https://www.nanosats.eu/`, 2018. [Online; accessed 31-May-2008].

[6] *PC / 104 Specification*. Consortium, PC/104 Embedded, 2.6 edition, 2008.

[7] *Cubesat design specification*. CalPoly, 13 edition, 2009.

[8] *NanoRacks CubeSat Deployer (NRCSD) Interface Control Document*. NanoRacks, 0.36 edition, 2013.

[9] *CubeSat Deployers*. ISISpace, 1.0 edition, 2016.

[10] ISISpace. ISIPOD CubeSat Deployer. `https://www.isispace.nl/product/isipod-cubesat-deployer/`, 2018. [Online; accessed 6-August-2008].

[11] Mukund R. Patel. *Spacecraft Power Subsystems*. CRC Press, 2004.

[12] Universita Degli Studi di Napoli. Notes from the course on Space Systems. Student Platform, 2016.

[13] Vincent L Pisacane. *Fundamentals of space systems*. Oxford University Press, 2005.

[14] eoPortal. Satellite Missions Database. `https://directory.eoportal.org/web/eoportal/satellite-missions/`, 2018. [Online; accessed 8-August-2018].

[15] *Small Satellite Propulsion*. NASA, 1.0 edition, 2015.

[16] John E. Keesee. Spacecraft Computer Systems. *MIT Lecture notes Satellite Engineering*, 2003.

[17] Massimo Tipaldi and Bernhard Bruenjes. Spacecraft health monitoring and management systems. *IEEE Metrology for Aerospace*, 2014.

[18] Falk Nohka, Martin Drobczyk, and Ansgar Heidecker. Experiences in Combining Cubesat Hardware and Commercial Components from Different Manufacturers in order to build the Nano Satellite AISat/Clavis-1. *26th Annu. AIAA/USU Conf. Small Satell.*, 2012.

[19] Keith Avery, Jeffery Finchel, Jesse Mee, William Kemp, Richard Netzer, Donald Elkins, Brian Zufelt, and David Alexander. Total dose test results for CubeSat electronics. *IEEE Radiation Effects Data Workshop*, 2011.

[20] Nicholas Felker, Matthew Brooks, Nicholas Decicco, Daniel Cahall, Russell Trafford, Sangho Shin, Robert Krchnavek, and John L Schmalzel. Building MemSat : A CubeSat for Testing Resistive Memory. *IEEE Sensors Applications Symposium*, 2017.

[21] Y A Ahmad, N J Nazim, and S S Yuhaniz. Design of a terminal node controller hardware for CubeSat tracking applications. *IOP Conf. Ser. Mater. Sci. Eng.*, 2016.

[22] Ivo Vertat and Ales Vobornik. Efficient and reliable solar panels for small CubeSat picosatellites. *International Journal of Photoenergy*, 2014.

[23] J. Bouwmeester and J. Guo. Survey of worldwide pico- and nanosatellite missions, distributions and subsystem technology. *Acta Astronaut.*, 67(7-8), 2010.

[24] Kirk Woellert, Pascale Ehrenfreund, Antonio J. Ricco, and Henry Hertzfeld. Cubesats: Cost-effective science and technology platforms for emerging and developing nations. *Advances in Space Research*, 47(4), 2011.

[25] Sharanabasaweshwara Asundi. *Cubesat System Design Based On Methodologies Adopted For Developing Wireless Robotic Platform*. PhD thesis, University of Florida, 2011.

[26] Stephane Mazouffre. Electric propulsion for satellites and spacecraft: Established technologies and novel approaches. *Plasma Sources Science and Technology*, 25(3), 2016.

[27] Kristina Lemmer. Propulsion for CubeSats. *Acta Astronaut.*, may 2017.

[28] Sébastien Duijsens. Preliminary study of a deployable CubeSat. Master's thesis, Université de Liège, 2017.

[29] Dai Dinh. Thermal modeling of a nanosat. Master's thesis, San Jose State University, 2012.

[30] *Small Spacecraft Technology State of the Art*. NASA, february edition, 2014.

[31] Gunter. Gunter's Space Page. `https://space.skyrocket.de/`, 2018. [Online; accessed 17-August-2018].

[32] Michael A. Swartwout. CubeSat Database, Saint Louis University. `https://sites.google.com/a/slu.edu/swartwout/home/cubesat-database`, 2018. [Online; accessed 24-May-2008].

[33] *Space Debris Mitigation Guidelines of the Committee on the Peaceful Uses of Outer Space*. United Nations - Office For Outer Space Affairs, 1.0 edition, 2010.

[34] *ESA Space Debris Mitigation Compliance Verification Guidelines*. ESA Space Debris Mitigation WG, 1.0 edition, 2015.

[35] Loretta Hall. The History of Space Debris. *Space Traffic Management Conference*, 2014.

[36] *Monthly Number of Objects in Earth Orbit by Object Type*. NASA, 1.0 edition, 2016.

[37] Ting Wang. Analysis of debris from the collision of the Cosmos 2251 and the Iridium 33 satellites. *Sci. Glob. Secur.*, 18(2), 2010.

[38] Aerospace Corporation. Understanding Space Debris. *Crosslink*, 16(1.0), 2015.

[39] J. C. Liou and N. L. Johnson. Instability of the present LEO satellite populations. *Advances in Space Research*, 41(7), 2008.

[40] Catherine C Venturini. Improving Mission Success of CubeSats. *Aerospace Report No. TOR-2017-01689*, 2017.

[41] Space Safety Magazine. Space Debris Mitigation. `http://www.spacesafetymagazine.com/space-debris/mitigation/`, 2018. [Online; accessed 10-September-2018].

[42] *Space engineering - Verification Guidelines*. European Cooperation for Space Standardization, a edition, 2010.

[43] *Space engineering - Verification*. European Cooperation for Space Standardization, c edition, 2008.

[44] *Space engineering - Testing*. European Cooperation for Space Standardization, c edition, 2012.

[45] *Glossary of terms*. European Cooperation for Space Standardization, c edition, 2012.

[46] *Space Product Assurance - Quality Assurance*. European Cooperation for Space Standardization, 1.0 edition, 2013.

[47] *NanoRacks Safety Data Template (SDT) for CubeSats*. NanoRacks, 0.5 edition, 2016.

[48] *JEM Payload Accommodation Handbook Small Satellite Deployment Interface Control Document*. Japan Aerospace Exploration Agency (JAXA), 8 edition, 2015.

[49] Tom Sarafin, Poti Doukas, Demchak Lenny, Mike Browning, and Lyndsey Wright. Vibration Testing of Small Satellites. *Instar*, 2017.

[50] Kirit Patel, Teresa Kinney, and Chad Hebert. Exploring Structural Dynamics. *AIAA*, 2004.

[51] *FYS Design Specification*. European Space Agency - Education, 2.5 edition, 2018.

[52] Lisa A Baghal. Ait methods for operationally responsive space satellites. Master's thesis, Air Force - Air University, 2010.

[53] Ruben Afonso and João Monteiro. ISTsat-1 Bootstrap & Operational Modes. NS1-SE-SD-02 D, IST, 2018.

[54] *Requirements on Space Debris Mitigation for ESA Projects*. ESA, march edition, 2007.

[55] Nuno Andrada and João Monteiro. IST-sat1 Structure & Mechanisms Design Definition. NS1-SM-SD-01 C, IST, 2018.

[56] ESA. Space Debris User Portal. `https://sdup.esoc.esa.int/group/csdtf/home`, 2018. [Online; accessed 12-August-2008].

[57] Population Division United Nations, Department of Economic and Social Affairs. The 2017 Revision Key Findings and Advance Tables. *World Population Prospect*, 2017.

[58] *Manual soldering of high-reliability electrical connections*. European Cooperation for Space Standardization, c edition, 2009.

[59] ElectroLube. What is Conformal Coating. `https://www.electrolube.com/products/what-is-conformal-coating.html`, 2018. [Online; accessed 2-August-2008].

[60] *Thermal testing for the evaluation of space materials, processes, mechanical parts and assemblies*. European Cooperation for Space Standardization, c edition, 2008.

[61] *Lithium Battery Guidance Document*. International Air Transport Association, 1.0 edition, 2017.

[62] *Crewed Space Vehicle Battery Safety Requirements*. NASA, c edition, 2014.

[63] Georgios Christidis, Ioannis Karatzaferis, and Andreas Ampatzoglou. Battery Testing Report according to NR-SRD-139. UPSat/GR02 2, University of Patras, 2015.

[64] Paulo Macedo. Test Specification and Test Procedure for the Full Functional Test. NS1-SE-TP-00 B, IST, 2018.

[65] João Monteiro and Paulo Macedo. User Manual. NS1-Q-UM-00 0, IST, 2018.

[66] Paulo Macedo. Test Specification and Test Procedure for the Mission Test. NS1-SE-TP-01 A, IST, 2018.

[67] *Falcon 9 Payload User's Guide*. SpaceX, 2 edition, 2015.

[68] Pedro Coelho. ISTNanosat-1 Quality Assurance , Risk Management and Assembly , Integration and Verification Planning. Master's thesis, IST, 2016.

[69] NASA. Launch Services Program Program Level Dispenser and CubeSat Requirements Document. *Launch Service Program*, LSP-REQ-317.01(B), 2014.

[70] Paulo Macedo. Assembly and Integration Procedure. NS1-Q-AIP-00 C, IST, 2018.

[71] *Pocket guide to tightening technique*. AtlasCopco, 1.0 edition, 2015.

[72] Alexandre Silva. Electrical Ground Support Equipment. NS1-Q-SD-04 A, IST, 2018.

Appendix A

Overall view of the ISTsat-1 CubeSat

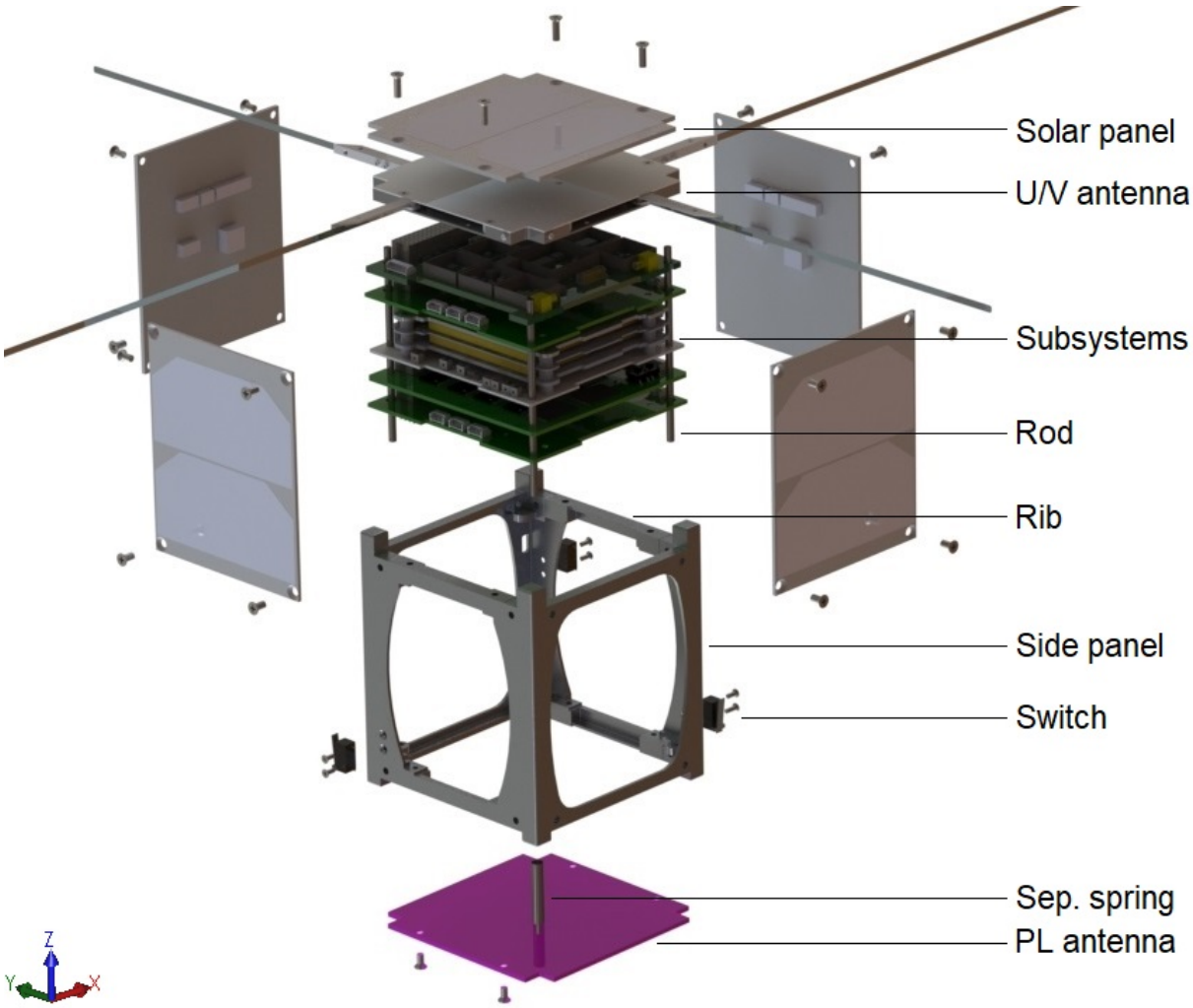

Figure A.1: Overall view of the ISTsat-1 CubeSat.

Appendix B

Verification flow for the EM

Figure B.1: EM general verification flow.

Appendix C

Sample tables of the FFT

Table C.1: Sample table of the Requirement Matrix for the FFT.

Req. ID	Step IDs	Requirement Text
AOC-FKT-050	35	The AOCS shall implement and carries out a task to test each individual hardware blocks.
AOC-FKT-070	35	The AOCS shall monitor the power consumption of its sensors and actuators.
AOC-ITF-160	65	The AOCS shall be able to receive commands from the OBC to initiate any of the following modes: Detumbling, NADIR pointing and Off.
AOC-OPS-080	64	The AOCS should calculate its orbital position based on Kepler elements, updated by the GS.
COM-DCP-060	25	The COM shall have two watchdog timers (internal and external) to reboot the system in case of software glitches.
COM-FKT-010	27	The COM shall store mission and housekeeping data from all subsystems.
COM-FKT-080	2,010; 3; 12	The COM shall have the following operational modes: init, safe and normal.
COM-FKT-090	27	The COM shall log events on-board and store them on persistent memory for later downlinking to the ground where they will be analysed.
COM-ITF-040	27,030	The COM shall have two serial synchronous interfaces with the modem.
COM-ITF-070	27,030	The COM shall interface with the payload, as well as with the rest of the platform's subsystems through the I2C bus (redundant bus).
EPS-DCP-010	3	The EPS shall have four operating modes: Init, Normal mode, Safe mode and Back-up mode.
EPS-DCP-090	2,030	The EPS shall not be ON, until after the RBF pin has been removed and kill switches be released
EPS-DCP-100	15	After deployment, EPS shall go into initialization mode
EPS-FKT-050	28	The EPS shall not provide more energy than the required by all the subsystems per orbit and on average.
EPS-FKT-110	28	The EPS shall monitor power consumption, SoH and SoC of the battery
EPS-FKT-130	34	The system shall perform auto-diagnostics and hot-swap faulty circuits with redundant ones
EPS-FKT-140	2,250	After satellite deployment the EPS shall countdown a 30 minute period before start supplying energy o the S/C.
(...)	(...)	(...)

Table C.2: Sample table of the step-by-step Procedure for the FFT.

Step ID	Instruction	Expected Result	Pass/Fail criteria	Actual Result	Passed [Y/N]	Remarks	Date/ Time	PA signature
1	**Preparation**							
1,010	Operators put on clean room related equipment (ESD protections, shoe covers, coverall, hairnet, hood, safety glasses, gloves)							
1,020	Operators go through the required equipment (see Chapter 2.6) and place them in a support ESD protected table							
1,030	Operators go through a visual check on all components. Specially check for scratches on solar panels, antennas and hard anodized parts of the structure							
1,040	Put the MGSE on a ESD protected table							
1,050	Put the S/C in the MGSE (see Illustration 2). The -Z face shall be in direct line-of-sight to the device emitting the simulated ADS-B signals and the roller switch shall not be in contact with the MGSE (+Y face up)							
1,060	Connect the computer to all radios defined on Chapter 2.60							
1,070	Open the GS software on the computer							

Table C.2 – Sample table of the step-by-step Procedure for the FFT (continued).

Step ID	Instruction	Expected Result	Pass/Fail criteria	Actual Result	Passed [Y/N]	Remarks	Date/ Time	PA signature
1,080	The GS engineer goes through diagnostics of the GS functionalities	SUCCESS	SUCCESS					
1,090	Turn-on recording of all radio signals on the computer	SUCCESS						
1,100	Connect the computer to the S/C through the -Z face service port							
1,110	Operators check if the test set-up is according to Chapter 2.5							
2	**Init to Safe mode transition - cold start, OBC OK**							
2,010	Release the deployment switches							
2,020	Verify that the battery is charging with the RBF pin inserted into the spacecraft							
2,030	Remove the RPF Pin							
2,040	Wait 10 minutes							
2,050	Send reqData(to: OBC, var: MODE)	INIT-MODE	Received operational mode					
2,060	Send reqData(to: EPS, var: MODE)	INIT-MODE						
2,070	Send reqData(to: TTC, var: MODE)	INIT-MODE						
2,080	Send reqData(to: COM, var: MODE)	INIT-MODE						
2,090	Send reqData(to: PAY, var: MODE)	No response						

Table C.2 – Sample table of the step-by-step Procedure for the FFT (continued).

Step ID	Instruction	Expected Result	Pass/Fail criteria	Actual Result	Passed [Y/N]	Remarks	Date/ Time	PA signature
2,100	Send TC-reqData(to: OBC, var: MODE)	No response						
2,110	Wait 10 minutes							
2,120	Send reqData(to: OBC, var: MODE)	INIT-MODE	Received operational mode					
2,130	Send reqData(to: EPS, var: MODE)	INIT-MODE						
2,140	Send reqData(to: TTC, var: MODE)	INIT-MODE						
2,150	Send reqData(to: COM, var: MODE)	INIT-MODE						
2,160	Send reqData(to: PAY, var: MODE)	No response						
2,170	Send reqData(var: EPS-HEALTH-CHECKS)	Receives non-null data						
2,180	Send TC-reqData(to: OBC, var: MODE)	No response	No radio emissions					
2,190	Wait 10 minutes							
2,200	Send reqData(var: DEPLOY-ANTENNAS)	TRUE	TRUE					
2,210	Wait 1 minute							
2,220	Send reqData(to: TTC, var: ANTENNAS-DEPLOYED)	FALSE						
2,230	Send CMD(to: TTC, id: OVERRIDE, var: ANTENNAS-DEPLOYED, arg: True)	SUCCESS	SUCCESS					
2,240	Wait 1 minute							

Table C.2 – Sample table of the step-by-step Procedure for the FFT (continued).

Step ID	Instruction	Expected Result	Pass/Fail criteria	Actual Result	Passed [Y/N]	Remarks	Date/ Time	PA signature
2,250	Use EGSE to verify Beacon reception	Beacon signal received	Beacon signal received					
2,260	Send reqData(to: OBC, var: MODE)	SAFE-MODE	Received operational mode					
2,270	Send reqData(to: EPS, var: MODE)	SAFE-MODE						
2,280	Send reqData(to: TTC, var: MODE)	SAFE-MODE						
2,290	Send reqData(to: COM, var: MODE)	No response						
2,300	Send reqData(to: PAY, var: MODE)	No response						
2,310	Send reqData(var: SUBSYSTEMS-INTERNAL-TIMERS)	Time differs no more than 10 seconds than real time	Time differs no more than 20 seconds than real time					
2,320	Send reqData(var: HK-DATA-OBC)	Receives non-null data						
3	**Safe to Normal mode transition**							
3,010	Send CMD(id:SET-MODE, arg: NORMAL-MODE)							
3,020	Send reqData(to: OBC, var: MODE)	NORMAL-MODE	Received operational mode					
3,030	Send reqData(to: EPS, var: MODE)	NORMAL-MODE						

Appendix D

Samples of the AIP document

Table D.1: GSE, tools and consumables check list.

Item description	Details	PA initials
MGSE for assembly	See Figure 6.1	
MGSE for storage/handling	See Figure 5.6	
Torque wrench	Capable of reading 0.35 Nm and 1.20 Nm	
Cr-V bits	M2 and M3, cross	
Camera		
ESD protections	One per operator	
ESD mats	One mat covering the assembly table and another covering the support/storage table	
Tweezers		
Test probe		
Multimeter with battery		
Blue shoe covers	One pair per operator	
Coverall	One per operator	
Hairnet and Hood	One per operator	
Boots	One pair per operator	
Safety Glasses	One per operator	
Gloves	One pair per operator	
Lint free wipes		
Isopropyl alcohol		
Glue	Loctite	
Wire crimper		
Soldering station		
Kapton tape		
Computer with diagnostics software		
Raspberry PI and wiring for +X service connector (see [72] for the design choice)		
Temperature sensor		
Relative humidity sensor		
2 pin connector short-circuited (for the RBF connector)		

Table D.2: Sample table of the ISTsat-1 components and parts

Item description	**Quantity, designation**
Micro Switch	Qt. = 2 +1 spare
Roller Switch	Qt. = 1 +1 spare
Separation Spring	Qt. = 2 +1 spare
Axis	Qt. = 4 +2 spare
-Y, +Y Side Frame	Qt. = 2 +1 spare
-Z Ribs	Qt. = 2 +1 spare
+Z Ribs	Qt. = 2 +1 spare
Spacer 1, M3x13.30 mm {-Z Rib to ADS-B Payload}	Qt. = 4 +1 spare
Spacer 2, M3x10.30 mm {ADS-B Payload to COM}	Qt. = 4 +1 spare
Spacer 3, M3x10.85 mm {COM to EPS}	Qt. = 4 +1 spare
Spacer 4, M3x22.80 mm {EPS to OBC}	Qt. = 4 +1 spare
Spacer 5, M3x9.50 mm {OBC to TTC}	Qt. = 4 +1 spare
Spacer 6, M3x3.60 mm {TTC to +Z Rib}	Qt. = 4 +1 spare
ABS-B Payload	Qt. = 1
COM	Qt. = 1
EPS	Qt. = 1
OBC	Qt. = 1
TTC	Qt. = 1
U/V antenna	Qt. = 1
-Y Solar panel, with sun-sensor	Qt. = 1
-X & +Y Solar panel, with sun-sensor and magnetorquer	Qt. = 2
+Z Solar panel, with sun-sensor and magnetorquer	Qt. = 1
+X Solar panel, with sun-sensor, RBF and service port	Qt. = 1
Payload antenna	Qt. = 1
Din 7046, M3x10 mm, side Solar Panels and Payload Antenna	Qt. = 20 +10 spare
Din 7046, M3x14 mm, +Z Solar Panel	Qt. = 4 +2 spare
Din 7046, M2x5 mm, Deployment Switches	Qt. = 6 +3 spare
RBF pin	Qt. = 1
Connector wire, 12 to 5 pins, Solar panels to OBC (magnetorquers and sun-sensors)	#1, length = 10 cm (+Y); #2, length = 5 cm (-X); #3, length = 10 cm (-Y); #4, length = 5 cm (+X); #5, length = 15 cm (+Z)
Connector wire, 4 to 4 pins, Solar panels to EPS (power)	#6, length = 20 cm (+Y); #7, length = 10 cm (-X); #8, length = 15 cm (-Y); #9, length = 20 cm (+X); #10, length = 20 cm (+Z)
Connector wire, 2 to 2 pins, +X Solar panel to EPS (RBF pin)	#11, length = 18 m
Connector wire, 2 to 2 pins, +X Solar panel to EPS (battery charge)	#12, length = 20 cm
Connector wire, 2 to 2 pins, Micro Switches to EPS	#13, length = 10 cm (-X, +Y); #14, length = 18 cm (+X, -Y);
Connector wire, 2 to 2 pins, Roller Switch to EPS	#15, length = 12 cm
Connector wire, 8 to 8 pins, U/V antenna to TTC (I2C and power)	#16, length = 8 cm
UHF to TTC	#17, length = 12 cm
VHF to TTC	#18, length = 12 cm
Payload antenna to Payload	#19, length = 12 cm
Connector wire, 4 to 4 pins, Payload to EPS (battery charge)	#20, length = 12 cm
Thermocouples	Qt. = 4 +1 spare
Connectors (spares)	2 pins, Qt. = 2; 4 pins, Qt. = 6; 5 pins, Qt. = 3; 8 pins, Qt. = 1; 9 pins, Qt. = 1; 12 pins, Qt. = 3
Wire (spares)	2 wires, length = 80 cm; 4 wires, length = 100 cm; 5 wires, length = 50 cm; 8 wires, length = 10 cm
Battery pack (spare)	Qt. = 1

Figure D.1: ISTsat-1 AIP sequential diagram.

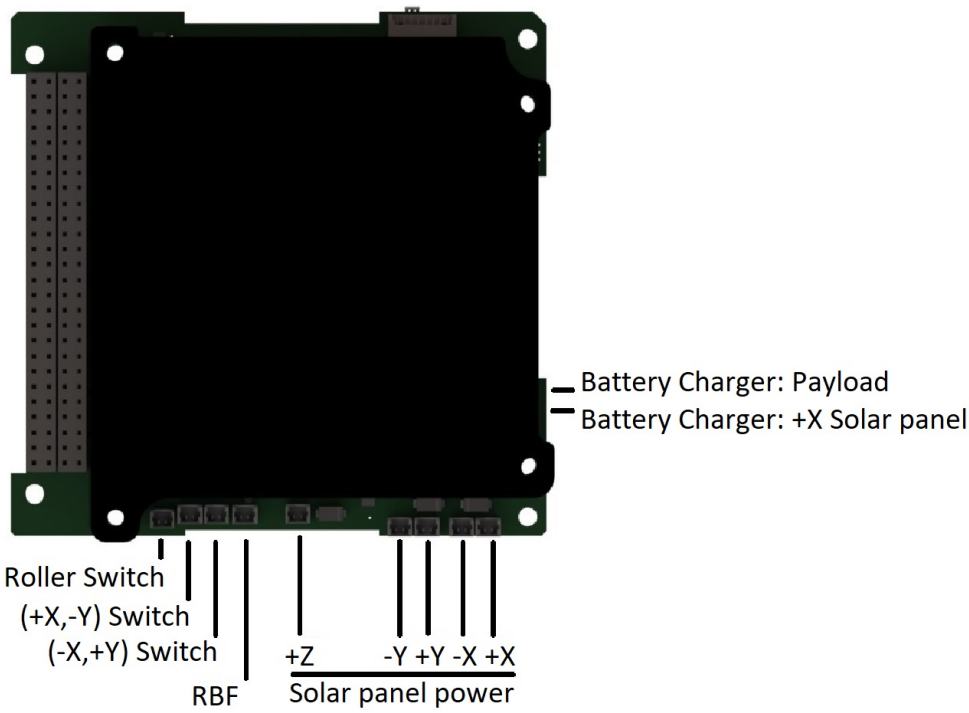

Figure D.2: ISTsat-1 EPS connections.

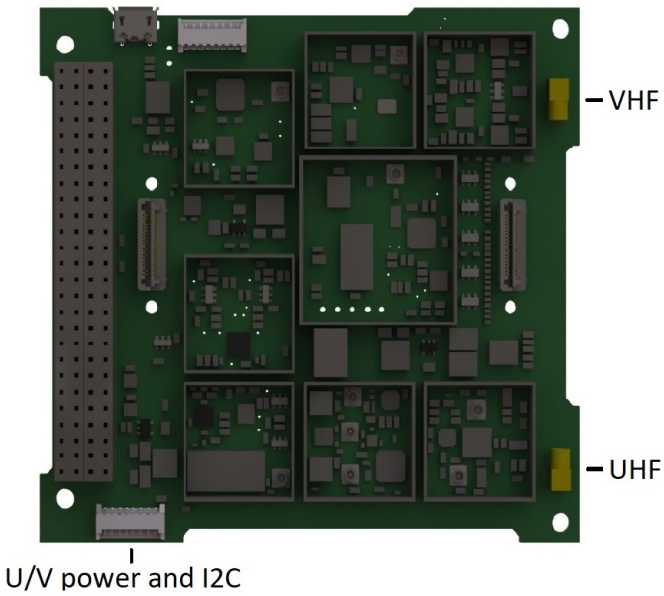

Figure D.3: ISTsat-1 TTC connections.